檔　　號：

保存年限：

經濟部標準檢驗局第一組　書函

台灣醫療暨生技器材工業同業公會
收 108. 07. 10 文
檔號: 108435

機關地址：10051臺北市中正區濟南路1段4號
聯 絡 人：吳啓瑞
聯絡電話：33435114-114
電子郵件：jerrycr.wu@bsmi.gov.tw
傳　　真：33435172

241
新北市三重區重新路5段609巷6號3樓之3

受文者：台灣醫療暨生技器材工業同業公會（請函轉會員）

發文日期：中華民國108年7月8日
發文字號：經標一組字第10810010350號
速別：普通件
密等及解密條件或保密期限：
附件：如文

主旨：請就本局編擬之CNS草-制1080281「尿失禁用尿液吸收輔具－聚合物吸收材料特性試驗法－第7部：重力測定壓力下之吸收率」等3種國家標準草案惠提意見，如無意見亦請在空白意見書上註明無意見，並請於108年9月20日前惠復（或電子郵件寄jerrycr.wu@bsmi.gov.tw）本局第一組第四科吳啟瑞。

說明：檢附上開草案暨空白意見書各1份 。

正本：王淑芬委員、何達仁委員、吳明美委員、李淑貞委員、胡景灝委員、馬海霞委員、常挽瀾委員、張力山委員、張日聖委員、曾明基委員、蓋惠珍委員、趙福杉委員、鄭宗記委員、賴柏樺委員、韓德生委員、衛生福利部、衛生福利部食品藥物管理署、衛生福利部社會及家庭署、衛生福利部社會及家庭署多功能輔具資源整合推廣中心、中華民國老人福利推動聯盟（請函轉會員）、中華民國老人福祉協會（請函轉會員）、中華民國消費者文教基金會、中華民國脊髓損傷者聯合會（請函轉會員）、台北市美國商會醫療器材委員會（請函轉會員）、臺北榮民總醫院身障重建中心、台灣障礙者權益促進會（請函轉會員）、台灣醫療暨生技器材工業同業公會（請函轉會員）、社團法人中華民國身心障礙聯盟（請函轉會員）、財團法人自行車暨健康科技工業研究發展中心、財團法人金屬工業研究發展中心(北區)、台灣檢驗科技股份有限公司、全國公證檢驗股份有限公司、台灣德國萊因技術監護顧問股份有限公司、經濟部標

準檢驗局第三組、經濟部標準檢驗局第六組

副本：

經濟部標準檢驗局第一組

裝

訂

線

CNS 草-制 1080281「尿失禁用尿液吸收輔具－聚合物吸收材料特性試驗法－第 7 部：重力測定壓力下之吸收率」等 3 種國家標準草案審查意見書

此致　　經濟部標準檢驗局　第一組第四科吳啟瑞　　共　頁第　頁

草案編號	節　　次	審　　查　　意　　見
	編修說明： 為與國際標準調和，及提高國內廠商之競爭力與保障消費者權益，依據最新版之 ISO 17190-7:2001、ISO 17190-8 及 ISO 17190-9 制定國家標準。	

審查委員或單位簽名（請務必填寫）：

文號：經標一字第 1081001035 號、108 年 9 月 20 日截止（請不必備文，本表若不敷使用，請自行影印）、倘需各標準草案或意見書空白表電子檔，請以 E-mail(jerrycr.wu@bsmi.gov.tw)來函索取。

標準檢驗局承辦人：吳啟瑞

ICS 11.180.20

中華民國國家標準

CNS

尿失禁用尿液吸收輔具－聚合物吸收材料特性試驗法－第7部：於壓力下以重力法測定吸收率

Urine-absorbing aids for incontinence – Test methods for characterizing polymer-based absorbent materials – Part 7: Gravimetric determination of absorption under pressure

CNS 17190-7(草-制1080281):2019
T5066-7

中華民國　年　月　日制定公布
Date of Promulgation:　-

中華民國　年　月　日修訂公布
Date of Amendment:　-　-

本標準非經經濟部標準檢驗局同意不得翻印

※

目錄

節次 頁次
前言 2
1. 適用範圍 3
2. 引用標準 3
3. 原理 3
4. 試劑 3
4.1 水 3
4.2 氯化鈉溶液，c (NaCl)=0.9 %(m/m) 3
5. 試驗裝置 3
5.1 於壓力下量測吸收率之裝置 3
5.2 分析天平 4
5.3 計時器 4
5.4 定量瓶 4
6. 取樣 4
7. 步驟 5
8. 計算 5
9. 精密度 5
10. 試驗報告 6
附錄 A (參考) 7
附錄 B (參考)實驗室間試驗之統計結果 8

(共 8 頁)

前言

本標準係依據 2001 年發行之第 1 版 ISO 17190-7，不變更技術內容，制定成為中華民國國家標準者。

本標準係依標準法之規定，經國家標準審查委員會審定，由主管機關公布之中華民國國家標準。

依標準法第四條之規定，國家標準採自願性方式實施。但經各該目的事業主管機關引用全部或部分內容為法規者，從其規定。

本標準並未建議所有安全事項，使用本標準前應適當建立相關維護安全與健康作業，並且遵守相關法規之規定。

本標準之部分內容，可能涉及專利權、商標權與著作權，主管機關及標準專責機關不負責任何或所有此類專利權、商標權與著作權之鑑別。

1. 適用範圍

本標準規定於規定壓力下，測定聚丙烯酸酯(polyacrylate, PA)超吸收粉末吸收氯化鈉溶液能力之方法。

此方法適用於顆粒大小小於 45 μm 的量，最大為 0.1 %之材料。

2. 引用標準

下列標準因本標準所引用，成為本標準之一部分。下列引用標準適用最新版(包括補充增修)。

CNS 1351　紙、紙板及紙漿－樣本之調製與試驗之標準狀態

CNS 3699　化學分析用水

ISO 5725-2　Accuracy (trueness and precision) of measurement methods and results – Part 2: Basic method for the determination of repeatability and reproducibility of a standard measurement method

3. 原理

將測試樣品稱重並在靠近規定圓筒之底部篩網上展開。首先將均勻之壓力施加到測試樣品。然後將圓筒置於濾板上，將其置於充滿氯化鈉溶液之培養皿中。經過 1 h 之吸收接觸時間後，將圓筒從濾板上取下並稱重，以確定吸收之流體量。

4. 試劑

除另有規定外，僅使用已認可之分析級試劑。

4.1 水

符合 CNS 3699 參考 1 之化學分析用水。

4.2 氯化鈉溶液，c (NaCl)=0.9 %(m/m)

稱取 9 g 氯化鈉(參照 CNS 1958)精確至 0.1 g，置入 1 L 定量瓶(5.4)內，加入去離子水(3 級，參照 4.1)至標線，攪拌至溶解。

5. 試驗裝置

5.1 於壓力下量測吸收率之裝置

參照圖 1，由下述組成:

5.1.1 培養皿或托盤

每一測試裝置之底面積為 400 cm^2。

5.1.2 濾板

於陶瓷內，其過濾直徑為 120 mm，孔隙率=0，高度至少 5 mm。

5.1.3 濾紙

直徑於 70 mm 至 120 mm 間，孔徑< 25 μm。

5.1.4 樹脂玻璃圓筒

內徑 d_1 =(60±0.2) mm，高度為(50±0.5) mm，在底部使用尼龍布篩網或不銹鋼篩網(400 目=36 μm)。

不同直徑之樹脂玻璃圓筒，參照附錄 A。

5.1.5 具圓柱重塊之塑膠活塞

總質量為(574±5) g，其表面密度為(21±0.2) g/cm^2。

活塞直徑 d_2 使 $d_1 - d_2$=(0.8±0.2) mm，圓柱重塊之高度為(60±0.5) mm。

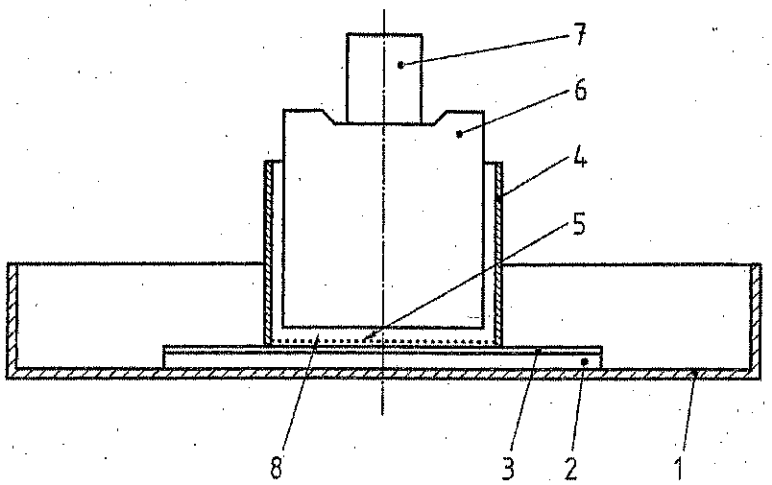

說明

1 培養皿(或托盤)

2 濾板

3 濾紙

4 樹脂玻璃圓筒

5 篩網

6 塑膠活塞

7 圓柱重塊

8 測試樣品

圖 1 用於測量 PA 超吸收性粉末在壓力下之吸收性的裝置

5.2 分析天平

可精稱至 0.001 g，最大量測質量可至 500 g。

5.3 計時器

1 h 內之準確度至 1 s。

5.4 定量瓶

容量 1 L，A 級。

6. 取樣

注意：當處理樣品超過 10 g 時，應使用呼吸防護系統、防塵口罩或通風櫃。

為確保從一大袋或筒倉卡車採取具代表性之試樣，應移除表層(大約 20 cm)。用勺子取樣後 3 min 內將其置入適當大小之氣密容器中。

將測試樣品保存在密閉容器中，並使其與實驗室環境溫度達到平衡，然後取出部分

樣品進行測試。較佳之測試條件溫度為(23±2) ℃及相對濕度(50±10) %。若無法於此條件下執行試驗，則於環境條件下進行試驗，並於報告中載明溫度及相對濕度。依據 CNS 1351 量測上述實驗室條件。

在進行試驗樣品尚未自容器取出前，在容器內先旋轉 3 次～5 次以獲得較均勻樣品。在打開蓋子取樣品前，允許容器靜置 5 min。

在執行試驗之前，確保試驗樣品基本上無直徑大於 1 mm 之塊體。

7. 步驟

7.1 將 PA 超吸收粉末測試樣品中，秤取 0.9 g 之測試粉末，秤至最接近之 0.005 g，其並記錄為 m_s，對應於測試圓筒底部篩網上指定之超吸收劑表面密度為 0.032 g/cm^2。

7.2 小心將測試樣品均勻分散至已清潔並乾燥之塑脂玻璃圓筒篩網(5.1.4)上。

7.3 將活塞(5.1.5)置入圓筒中，並秤取其完整之質量，並記錄為 m_A。

7.4 將濾板(5.1.2)置入培養皿(5.1.1)中。

7.5 加入氯化鈉溶液(4.2)至液面與濾板表面等高。

7.6 將圓形濾紙(5.1.3)放在濾板(5.1.2)上，用氯化鈉溶液徹底潤濕。避免任何表面液體。

7.7 將完成之裝置置於濕濾紙上，同時將重塊(5.1.5)加到裝置上，讓測試樣品吸收氯化鈉溶液(60±1) min。

7.8 舉起整個裝置並移除重塊。重新稱取圓筒裝置(7.3)之質量，並記錄為 m_B。

7.9 使用去離子水徹底清潔圓筒及活塞並乾燥。乾燥溫度不得大於 40 ℃，以防止損壞。

7.10 重複 7.1 至 7.9 以獲得重複量測。

7.11 使用去離子水清洗濾板。

8. 計算

針對每一測試樣品，計算壓力下之吸收(w)，以質量率表示(g/g)。

$$w=\frac{m_A-m_B}{m_s}$$

式中，m_S ：乾燥測試樣品質量(g)

m_A ：乾燥圓筒組質量(g)

m_B ：經吸收後之圓筒組質量(g)

計算 2 次計算值之平均值。

9. 精密度

本方法數據之重複性及再現性之限值資料，係 EDANA 於 1997 年進行實驗室間比對試驗之結果，並提供於附錄 B。

依 ISO 5725-2 重複試驗條件下，2 次個別試驗結果間之絕對差異，多過 5 %的狀況都不應超過重複性限值 r。

r=1.62 g/g

依 ISO 5725-2 再現試驗條件下，2 次個別試驗結果間之絕對差異，多過 5 %的狀況

都不應超過再現性限值 R。

R=5.30 g/g

若無法符合再現性及重複性標準，則每次試驗 2 份樣品，每份樣品應各進行 2 次重複試驗，試驗前，應確保原始待測樣品已充分混合。若還是無法符合標準，則報告此異常試驗結果，並分析誤差來源如查證儀器正確之操作程序及利用已知值之材料進行試驗。

10. 試驗報告

試驗報告應包含下述資訊。

(a) 試驗組織名稱及地址。

(b) 聚合物基吸收材料種類，包括用於完整鑑別樣品所需之所有技術細節及來源資訊。

(c) 本標準總號。

(d) 壓力下之吸收率，以質量分率 g/g 表示，精確至 0.1 g/g，及平均值作重複判定。

(e) 測定過程中任何異常現象或若不符合重複性及/或再現性標準(第 9 節)。

(f) 任何步驟之差異或任何選用之操作。

附錄 A
(參考)
針對特殊情況之不同圓筒直徑及壓力建議

A.1 不同之圓筒直徑

若使用不同直徑之圓筒，則應根據下述規定調整測試樣品之質量及濾板質量：

試驗樣品鋪展於圓筒底部區域上之層的表面密度應等於 0.032 g/cm^2；

活塞加上重塊之質量，使得施加於超吸收層上之壓力，等於表面密度為 21 g/cm^2 而產生之壓力。

修改之直徑、試驗樣品及覆蓋質量應於試驗報告中提及。

A.2 不同的壓力

若施加不同之壓力，則應於試驗報告中提及。

附錄 B
(參考)
實驗室間試驗之統計結果

本方法數據之重複性及再現性之限值資料，係 EDANA 於 1997 年進行實驗室間比對試驗之結果。實驗室依 ISO 5725-2 進行重複性及再現性試驗之結果分析如下。

樣品編號	A	B	C
參與實驗室數	10	10	10
試驗結果可接受之實驗室數(捨棄離群值之結果)	9	9	9
可接受試驗結果之數量	36	36	36
平均值(g/g)	28.40	30.44	29.86
重複性標準差(s_r)	0.53	0.49	0.58
變異重複性係數(%)	1.85	1.60	1.94
重複性限值(r)($2.8\times s_r$)	1.47	1.36	1.62
再現性標準差(s_R)	0.86	1.35	1.89
變異再現性係數(%)	3.03	4.42	6.33
再現性限值(R)($2.8\times s_R$)	2.41	3.77	5.30

相對應國際標準

ISO 17190-7:2001 Urine-absorbing aids for incontinence – Test methods for characterizing polymer-based absorbent materials – Part 7: Gravimetric determination of absorption under pressure

ICS 11.180.20

中華民國國家標準

CNS

尿失禁用尿液吸收輔具－聚合物吸收材料特性試驗法－第8部：以重力測定流率

Urine-absorbing aids for incontinence – Test methods for characterizing polymer-based absorbent materials – Part 8: Gravimetric determination of flowrate

CNS 17190-8(草-制1080282):2019
T5066-8

中華民國　年　月　日制定公布
Date of Promulgation: - -

中華民國　年　月　日修訂公布
Date of Amendment: - -

本標準非經經濟部標準檢驗局同意不得翻印

※

目錄

節次 頁次
前言 2
1. 適用範圍 3
2. 引用標準 3
3. 用語及定義 3
4. 原理 3
5. 試驗裝置 3
5.1 具節流孔阻尼器之漏斗 3
5.2 漏斗刷 4
5.3 抹刀 4
5.4 分析天平 4
5.5 稱量皿 4
5.6 燒杯 4
5.7 環形立座 4
6. 取樣 4
7. 步驟 5
8. 計算 5
9. 精密度 5
10. 試驗報告 6
附錄 A (參考)實驗室間試驗之統計結果 7

(共 7 頁)

前言

本標準係依據 2001 年發行之第 1 版 ISO 17190-8，不變更技術內容，制定成為中華民國國家標準者。

本標準係依標準法之規定，經國家標準審查委員會審定，由主管機關公布之中華民國國家標準。

依標準法第四條之規定，國家標準採自願性方式實施。但經各該目的事業主管機關引用全部或部分內容為法規者，從其規定。

本標準並未建議所有安全事項，使用本標準前應適當建立相關維護安全與健康作業，並且遵守相關法規之規定。

本標準之部分內容，可能涉及專利權、商標權與著作權，主管機關及標準專責機關不負責任何或所有此類專利權、商標權與著作權之鑑別。

1. 適用範圍

本標準規定聚丙烯酸酯(polyacrylate, PA)超吸收粉末之質量流率的測定方法。

此方法已測定過(10.62～11.93) g/s 之範圍(參照附錄 A)，但期望可應用於更廣之質量流率範圍。

2. 引用標準

下列標準因本標準所引用，成為本標準之一部分。下列引用標準適用最新版(包括補充增修)。

CNS 1351	紙、紙板及紙漿－樣本之調製與試驗之標準狀態
ISO 5725-2	Accuracy (trueness and precision) of measurement methods and results – Part 2: Basic method for the determination of repeatability and reproducibility of a standard measurement method
ISO/TR 15510	Stainless steels – Chemical composition

3. 用語及定義

下列用語及定義適用於本標準。

3.1 流動性(flowability)

特定粉末質量通過規定之漏斗的時間。

備考：粉末質量以 g 表示。

3.2 流率(flowrate)

每單位時間通過規定漏斗之粉末質量。

備考 1.流率以 g/s 表示。

備考 2.本標準為簡化，以流率代表質量流率。

4. 原理

由具代表性之樣品倒入規定之漏斗，記錄粉末完全流出漏斗所需之時間，以測定 PA 超吸收粉末之流動性。以質量除以紀錄之時間計算流率。

5. 試驗裝置

5.1 具節流孔阻尼器之漏斗(參照圖 1)

以拋光不鏽鋼(材質依 ISO/TR 15510 規定之 X5CrNiMo17 17-12-3)製成，且具下述特徵：

- 節流孔內徑：(10±0.01) mm
- 錐角　　：20°
- 高度　　：(145±0.5) mm

單位：mm

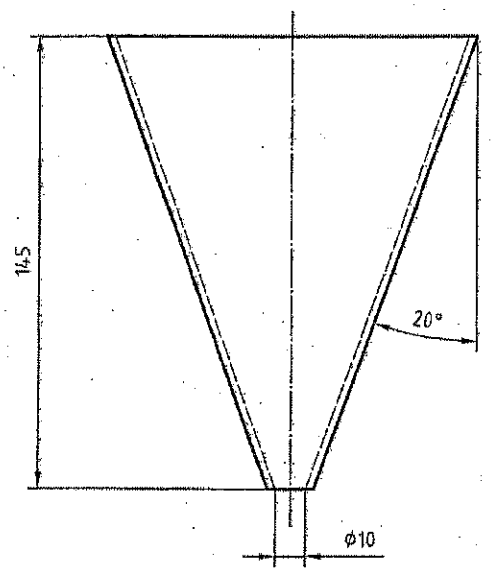

圖 1　流率測定用漏斗

5.2 漏斗刷

5.3 抹刀

勺子或 V 形。

5.4 分析天平

可精稱至 0.01 g，最大量測質量可至 100.00 g。

5.5 稱量皿

(40 × 25 × 6) cm。

5.6 燒杯

容量 250 mL，2 個。

5.7 環形立座

可維持漏斗於環中。

6. 取樣

注意：當處理樣品超過 10 g 時，應使用呼吸防護系統、防塵口罩或通風櫃。

為確保從一大袋或筒倉卡車採取具代表性之試樣，應移除表層(大約 20 cm)。用勺子取樣後 3 min 內將其置入適當大小之氣密容器中。

將測試樣品保存在密閉容器中，並使其與實驗室環境溫度達到平衡，然後取出部分樣品進行測試。較佳之測試條件溫度為(23 ± 2)℃及相對濕度(50 ± 10)%。若無法於此條件下執行試驗，則於環境條件下進行試驗，並於報告中載明溫度及相對濕度。依據 CNS 1351 量測上述實驗室條件。

在進行試驗樣品尚未自容器取出前，在容器內先旋轉 3 次~5 次以獲得較均勻樣品。

在打開蓋子取樣品前，允許容器靜置 5 min。

在執行試驗之前，確保試驗樣品基本上無直徑大於 1 mm 之塊體。

7. 步驟

7.1 將漏斗(5.1)置於環形立座(5.7)之圓環上，再將裝有漏斗之環形立座放至稱量皿(5.5)內。

7.2 將 PA 超吸收粉末測試樣品中，秤取 100 g (ms)之測試粉末，秤至最接近之 0.01 g，置入 250 ml 燒杯(5.6)中。

7.3 關閉位於漏斗底部之節流孔阻尼器，沿漏斗壁倒出測試粉末，以避免沉澱。

7.4 將容器(例：燒杯，參見 5.6)直接放在漏斗孔下方。

7.5 打開節流孔阻尼器，並立即啟動計時器。

7.6 當測試粉末最後部分從漏斗中清空時停止計時器，讀取時間(t)，以 s 為單位。

7.7 由同一分析者，快速連續地使用同一混合良好之實驗室樣品至少進行 2 次測定。

7.8 應使用漏斗刷(5.2)清潔漏斗，刷除任何殘留之聚合物。

8. 計算

流動性為 100 g 測試樣品通過漏斗之時間(t)，以 s 為單位。流動性結果以最接近之 0.1 s 表示之。

每 100 g 測試樣品，依下式計算流率(q)。

$$q = \frac{m_s}{t}$$

式中， q ：流率(g/s)

m_s ：測試樣品質量(g)

t ：測試樣品透過漏斗之時間(s)

每一測試樣品之流率表示至最接近之 0.1 g/s。

計算 2 次測定之平均值。

9. 精密度

本方法數據之重複性及再現性之限值資料，係 EDANA 於 1997 年進行實驗室間比對試驗之結果，並提供於附錄 A。

依 ISO 5725-2 重複試驗條件下，2 次個別試驗結果間之絕對差異，多過 5 %的狀況都不應超過重複性限值 r。

r = 0.48 g/s

依 ISO 5725-2 再現試驗條件下，2 次個別試驗結果間之絕對差異，多過 5 %的狀況都不應超過再現性限值 R。

R = 5.23 g/s

若無法符合再現性及重複性標準，則每次試驗 2 份樣品，每份樣品應各進行 2 次重複試驗，試驗前，應確保原始待測樣品已充分混合。若還是無法符合標準，則報告此異常試驗結果，並分析誤差來源如查證儀器正確之操作程序及利用已知值之材料

進行試驗。

10. 試驗報告

試驗報告應包含下述資訊。

(a) 試驗組織名稱及地址。

(b) 聚合物基吸收材料種類，包括用於完整鑑別樣品所需之所有技術細節及來源資訊。

(c) 本標準總號。

(d) 樣品中是否有塊狀。

(e) 每次試驗粉末之流率結果，以 g/s 表示，精確至 0.1 g/s，及平均值作重複判定。

(f) 測定過程中任何異常現象或若不符合重複性及/或再現性標準(第 9 節)。

(g) 任何步驟之差異或任何選用之操作。

附錄 A
(參考)
實驗室間試驗之統計結果

本方法數據之重複性及再現性之限值資料，係 EDANA 於 1997 年進行實驗室間比對試驗之結果。實驗室依 ISO 5725-2 進行重複性及再現性試驗之結果分析如下。

樣品編號	A	B	C
參與實驗室數	10	10	10
試驗結果可接受之實驗室數(捨棄離群值之結果)	10	10	10
可接受試驗結果之數量	40	40	40
平均值(g/s)	10.94	10.62	11.93
重複性標準差(s_r)	0.12	0.17	0.15
變異重複性係數(%)	1.07	1.61	1.28
重複性限值(r)($2.8\times s_r$)	0.33	0.48	0.43
再現性標準差(s_R)	1.87	1.82	14.46
變異再現性係數(%)	17.07	17.18	14.46
再現性限值(R)($2.8\times s_R$)	5.23	5.11	4.83

相對應國際標準

ISO 17190-8:2001 Urine-absorbing aids for incontinence – Test methods for characterizing polymer-based absorbent materials – Part 8: Gravimetric determination of flowrate

ICS 11.180.20

中華民國國家標準

CNS

尿失禁用尿液吸收輔具－聚合物吸收材料特性試驗法－第9部：以重力測定密度

Urine-absorbing aids for incontinence – Test methods for characterizing polymer-based absorbent materials – Part 9: Gravimetric determination of density

CNS 17190-9(草-制1080283):2019
T5066-9

中華民國　年　月　日制定公布
Date of Promulgation:　-　-

中華民國　年　月　日修訂公布
Date of Amendment:　-　-

本標準非經經濟部標準檢驗局同意不得翻印

※

目錄

節次 頁次
前言 2
1. 適用範圍 3
2. 引用標準 3
3. 用語及定義 3
4. 原理 3
5. 試驗裝置 3
5.1 密度杯 3
5.2 具節流孔阻尼器之漏斗 4
5.3 漏斗刷 4
5.4 抹刀 4
5.5 分析天平 4
5.6 稱量皿 4
5.7 燒杯 4
5.8 環形立座 4
6. 取樣 5
7. 步驟 5
8. 計算 5
9. 精密度 6
10. 試驗報告 6
附錄 A (參考)實驗室間試驗之統計結果 7

(共 7 頁)

前言

本標準係依據 2001 年發行之第 1 版 ISO 17190-9，不變更技術內容，制定成為中華民國國家標準者。

本標準係依標準法之規定，經國家標準審查委員會審定，由主管機關公布之中華民國國家標準。

依標準法第四條之規定，國家標準採自願性方式實施。但經各該目的事業主管機關引用全部或部分內容為法規者，從其規定。

本標準並未建議所有安全事項，使用本標準前應適當建立相關維護安全與健康作業，並且遵守相關法規之規定。

本標準之部分內容，可能涉及專利權、商標權與著作權，主管機關及標準專責機關不負責任何或所有此類專利權、商標權與著作權之鑑別。

1. 適用範圍

本標準規定聚丙烯酸酯(polyacrylate, PA)超吸收粉末之視密度的測定方法。

此方法已測定過(0.67～0.72) g/mL 之範圍(參照附錄 A)，期望可應用於更廣之質量流率範圍。

2. 引用標準

下列標準因本標準所引用，成為本標準之一部分。下列引用標準適用最新版(包括補充增修)。

CNS 1351　紙、紙板及紙漿－樣本之調製與試驗之標準狀態

ISO 5725-2　Accuracy (trueness and precision) of measurement methods and results – Part 2: Basic method for the determination of repeatability and reproducibility of a standard measurement method

ISO/TR 15510　Stainless steels – Chemical composition

3. 用語及定義

下列用語及定義適用於本標準。

3.1 視密度(apparent density)

自由落下粉末之單位體積質量。

備考：視密度以 g/mL 表示。

4. 原理

由具代表性之樣品倒入規定之漏斗進入密度杯中，計算杯中之粉末質量(g)除以密度杯體積(mL)以作為聚合物之視密度。

5. 試驗裝置

5.1 密度杯(參照圖 1)

以拋光不鏽鋼(材質依 ISO/TR 15510 規定之 X5CrNiMo17 17-12-3)製成，且具下述特徵：

－ 容量：(100±0.5) mL

－ 內徑：(45±0.1) mm

－ 內部高度(h)：(63.1±0.1) mm

單位：mm

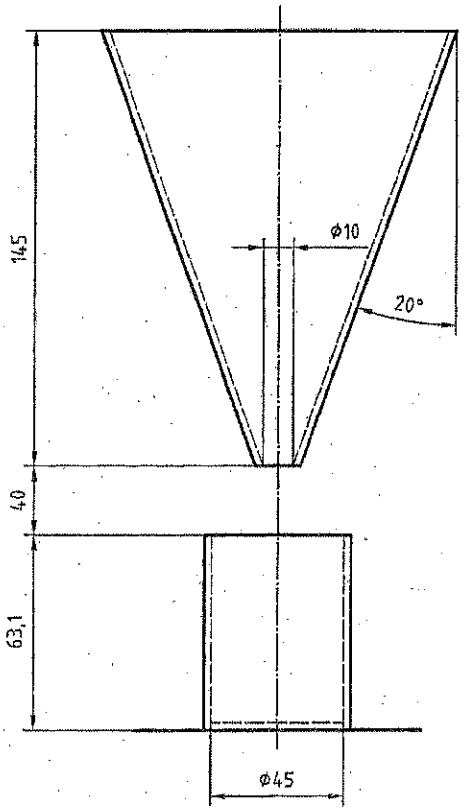

圖 1　漏斗及密度杯

5.2 具節流孔阻尼器之漏斗(參照圖 1)

以拋光不鏽鋼(材質依 ISO/TR 15510 規定之 X5CrNiMo17 17-12-3)製成，且具下述特徵：

－ 節流孔內徑：(10±0.01) mm

－ 錐角：20°

－ 高度：(145±0.5) mm

5.3 漏斗刷

5.4 抹刀

方形具平刀之勺子或 V 形。

5.5 分析天平

可精稱至 0.01 g，最大量測質量可至 100.00 g。

5.6 稱量皿

(40×25×6) cm。

5.7 燒杯

容量 250 mL。

5.8 環形立座

可維持漏斗於環中。

6. 取樣

注意：當處理樣品超過 10 g 時，應使用呼吸防護系統、防塵口罩或通風櫃。

為確保從一大袋或筒倉卡車採取具代表性之試樣，應移除表層(大約 20 cm)。用勺子取樣後 3 min 內將其置入適當大小之氣密容器中。

將測試樣品保存在密閉容器中，並使其與實驗室環境溫度達到平衡，然後取出部分樣品進行測試。較佳之測試條件溫度為(23±2) ℃及相對濕度(50±10) %。若無法於此條件下執行試驗，則於環境條件下進行試驗，並於報告中載明溫度及相對濕度。依據 CNS 1351 量測上述實驗室條件。

在進行試驗樣品尚未自容器取出前，在容器內先旋轉 3 次～5 次以獲得較均勻樣品。在打開蓋子取樣品前，允許容器靜置 5 min。

在執行試驗之前，確保試驗樣品基本上無直徑大於 1 mm 之塊體。

7. 步驟

7.1 將漏斗(5.2)置於環形立座(5.8)之圓環上，再將裝有漏斗之環形立座放至稱量皿(5.6)內，並將密度杯直接置於漏斗節流孔下方。調整漏斗之出口高度至距密度杯上方(40±1) mm。

7.2 秤取密度杯質量(m_1)至最接近之 0.01 g，並記錄之。

7.3 將 PA 超吸粉末測試樣品中，秤取 100 g 之測試粉末至最接近之 0.01 g，置入 250ml 燒杯中。

7.4 關閉位於漏斗底部之節流孔阻尼器，沿漏斗壁倒出測試粉末，以避免沉澱。

7.5 完全打開節流孔阻尼器，並允許測試粉末完全流入並溢出密度杯。

7.6 將漏斗輕輕旋轉離開密度杯，讓剩餘之樣品溢出至稱量皿中。

7.7 使用平刮刀(5.4)的刮刀垂直於杯子頂部，使樣品與杯子頂部齊平，以除去任何多餘之 PA 超吸收粉末。輕輕敲打杯子以使樣品沉澱，以避免在轉移至天平期間溢出。

7.8 秤取含樣品密度杯質量(m_2)至最接近之 0.01 g，並記錄之。

7.9 由同一分析者，快速連續地使用同一混合良好之實驗室樣品至少進行 2 次測定。

7.10 應使用漏斗刷(5.3)清潔漏斗，刷除任何殘留之聚合物。

8. 計算

PA 超吸收粉末之視密度(ρ)以 g/mL 表示，依下式計算之。

$$\rho = \frac{m_2 - m_1}{100}$$

式中， ρ ：視密度(g/mL)

m_1 ：密度杯質量(g)

m_2 ：含測試樣品之密度杯質量(g)

100 ：密度杯之體積(mL)

每一測試樣品之密度表示至最接近之 0.01 g/mL。

計算 2 次或多次測定之平均值。

9. 精密度

本方法數據之重複性及再現性之限值資料，係 EDANA 於 1997 年進行實驗室間比對試驗之結果，並提供於附錄 A。

依 ISO 5725-2 重複試驗條件下，2 次個別試驗結果間之絕對差異，多過 5 %的狀況都不應超過重複性限值 r。

r = 0.02 g/mL

依 ISO 5725-2 再現試驗條件下，2 次個別試驗結果間之絕對差異，多過 5 %的狀況都不應超過再現性限值 R。

R = 0.08 g/mL

若無法符合再現性及重複性標準，則每次試驗 2 份樣品，每份樣品應各進行 2 次重複試驗，試驗前，應確保原始待測樣品已充分混合。若還是無法符合標準，則報告此異常試驗結果，並分析誤差來源如查證儀器正確之操作程序及利用已知值之材料進行試驗。

10. 試驗報告

試驗報告應包含下述資訊。

(a) 試驗組織名稱及地址。

(b) 聚合物基吸收材料種類，包括用於完整鑑別樣品所需之所有技術細節及來源資訊。

(c) 本標準總號。

(d) 樣品中是否有塊狀。

(e) 每次試驗粉末之密度結果，以 g/mL 表示，精確至 0.1 g/mL，及平均值作重複判定。

(f) 測定過程中任何異常現象或若不符合重複性及/或再現性標準(第 9 節)。

(g) 任何步驟之差異或任何選用之操作。

附錄 A
(參考)
實驗室間試驗之統計結果

本方法數據之重複性及再現性之限值資料，係 EDANA 於 1997 年進行實驗室間比對試驗之結果。實驗室依 ISO 5725-2 進行重複性及再現性試驗之結果分析如下。

樣品編號	A	B	C
參與實驗室數	10	10	10
試驗結果可接受之實驗室數(捨棄離群值之結果)	10	9	10
可接受試驗結果之數量	40	36	40
平均值(g/ml)	0.67	0.69	0.72
重複性標準差(s_r)	0.00	0.01	0.00
變異重複性係數(%)	0.70	0.85	0.56
重複性限值(r)($2.8\times s_r$)	0.01	0.02	0.01
再現性標準差(s_R)	0.02	0.01	0.03
變異再現性係數(%)	2.38	2.17	3.89
再現性限值(R)($2.8\times s_R$)	0.04	0.04	0.08

相對應國際標準

ISO 17190-9:2001 Urine-absorbing aids for incontinence – Test methods for characterizing polymer-based absorbent materials – Part 9: Gravimetric determination of density

INTERNATIONAL STANDARD

ISO 17190-7

First edition
2001-12-01

Urine-absorbing aids for incontinence — Test methods for characterizing polymer-based absorbent materials —

Part 7: Gravimetric determination of absorption under pressure

Aides pour absorption d'urine — Méthodes d'essai pour caractériser les matériaux absorbants à base de polymères —

Partie 7: Détermination gravimétrique du pouvoir d'absorption sous pression

91. 1. 26
資料中心

Reference number
ISO 17190-7:2001(E)

© ISO 2001

PDF disclaimer

This PDF file may contain embedded typefaces. In accordance with Adobe's licensing policy, this file may be printed or viewed but shall not be edited unless the typefaces which are embedded are licensed to and installed on the computer performing the editing. In downloading this file, parties accept therein the responsibility of not infringing Adobe's licensing policy. The ISO Central Secretariat accepts no liability in this area.

Adobe is a trademark of Adobe Systems Incorporated.

Details of the software products used to create this PDF file can be found in the General Info relative to the file; the PDF-creation parameters were optimized for printing. Every care has been taken to ensure that the file is suitable for use by ISO member bodies. In the unlikely event that a problem relating to it is found, please inform the Central Secretariat at the address given below.

© ISO 2001

All rights reserved. Unless otherwise specified, no part of this publication may be reproduced or utilized in any form or by any means, electronic or mechanical, including photocopying and microfilm, without permission in writing from either ISO at the address below or ISO's member body in the country of the requester.

ISO copyright office
Case postale 56 • CH-1211 Geneva 20
Tel. + 41 22 749 01 11
Fax + 41 22 749 09 47
E-mail copyright@iso.ch
Web www.iso.ch

Printed in Switzerland

Contents

Page

Foreword iv
Introduction v
1 Scope 1
2 Normative references 1
3 Principle 1
4 Reagents 1
5 Apparatus 2
6 Sampling 3
7 Procedure 4
8 Calculation 4
9 Precision 5
10 Test report 5
Annex A (informative) Recommendations for special cases of different cylinder diameters and pressures 6
Annex B (informative) Statistical results of interlaboratory tests 7

© ISO 2001 – All rights reserved

Foreword

ISO (the International Organization for Standardization) is a worldwide federation of national standards bodies (ISO member bodies). The work of preparing International Standards is normally carried out through ISO technical committees. Each member body interested in a subject for which a technical committee has been established has the right to be represented on that committee. International organizations, governmental and non-governmental, in liaison with ISO, also take part in the work. ISO collaborates closely with the International Electrotechnical Commission (IEC) on all matters of electrotechnical standardization.

International Standards are drafted in accordance with the rules given in the ISO/IEC Directives, Part 3.

The main task of technical committees is to prepare International Standards. Draft International Standards adopted by the technical committees are circulated to the member bodies for voting. Publication as an International Standard requires approval by at least 75 % of the member bodies casting a vote.

Attention is drawn to the possibility that some of the elements of this part of ISO 17190 may be the subject of patent rights. ISO shall not be held responsible for identifying any or all such patent rights.

International Standard ISO 17190-7 was prepared by Technical Committee ISO/TC 173, *Technical systems and aids for disabled or handicapped persons*, Subcommittee SC 3, *Aids for ostomy and incontinence*.

ISO 17190 consists of the following parts, under the general title *Urine-absorbing aids for incontinence — Test methods for characterizing polymer-based absorbent materials*:

— *Part 1: Determination of pH*

— *Part 2: Determination of amount of residual monomers*

— *Part 3: Determination of particle size distribution by sieve fractionation*

— *Part 4: Determination of moisture content by mass loss upon heating*

— *Part 5: Gravimetric determination of free swell capacity in saline solution*

— *Part 6: Gravimetric determination of fluid retention capacity in saline solution after centrifugation*

— *Part 7: Gravimetric determination of absorption under pressure*

— *Part 8: Gravimetric determination of flowrate*

— *Part 9: Gravimetric determination of density*

— *Part 10: Determination of extractable polymer content by potentiometric titration*

— *Part 11: Determination of content of respirable particles*

ISO 17190 is intended to be used in conjunction with ISO 17191, *Urine-absorbing aids for incontinence — Airborne polyacrylate superabsorbent material in the workplace — Determination of the content in respirable dust by sodium atomic absorption spectrometry*.

Annexes A and B of this part of ISO 17190 are given for information only.

© ISO 2001 – All rights reserved

Introduction

ISO 17190 consists of a series of test methods originally developed by *European Disposables and Nonwovens Association (EDANA)*. These test methods have been incorporated without technical changes into one International Standard consisting of eleven parts.

These test methods have been in practical use for several years, and have proven to be reliable with respect to common criteria of quality of test methods (validity, repeatability, etc.). They are applicable to polyacrylate superabsorbent materials, which occur in hygiene products, including urine-absorbing aids for incontinent persons. The test methods are addressed to the *material* exclusively. They are not intended to be used, and are not applicable for use with finished manufactured urine-absorbing aids.

© ISO 2001 – All rights reserved

Urine-absorbing aids for incontinence — Test methods for characterizing polymer-based absorbent materials —

Part 7: Gravimetric determination of absorption under pressure

1 Scope

This part of ISO 17190 specifies a method for determining the capacity of polyacrylate (PA) superabsorbent powders to absorb saline solution under a specified pressure.

This method is applicable to materials having maximum 0,1 % of the particle size distribution below 45 µm.

2 Normative references

The following normative documents contain provisions which, through reference in this text, constitute provisions of this part of ISO 17190. For dated references, subsequent amendments to, or revisions of, any of these publications do not apply. However, parties to agreements based on this part of ISO 17190 are encouraged to investigate the possibility of applying the most recent editions of the normative documents indicated below. For undated references, the latest edition of the normative document referred to applies. Members of ISO and IEC maintain registers of currently valid International Standards.

ISO 187, *Paper, board and pulps — Standard atmosphere for conditioning and testing and procedure for monitoring the atmosphere and conditioning of samples*

ISO 3696, *Water for analytical laboratory use — Specification and test methods*

ISO 5725-2, *Accuracy (trueness and precision) of measurement methods and results — Part 2: Basic method for the determination of repeatability and reproducibility of a standard measurement method*

3 Principle

The test portion is weighed and spread on the bottom filter screen closing a specified cylinder. A uniform pressure is first applied to the test portion. The cylinder then is placed on a filter plate which is placed in a petri dish filled with saline solution. After an absorption contact time of 1 h, the cylinder is removed from the filter plate and weighed to determine the amount of fluid absorbed.

4 Reagents

Use only reagents of recognized analytical grade, unless otherwise specified.

4.1 Water, complying with ISO 3696.

4.2 Sodium chloride solution, c(NaCl) = 0,9 % by mass.

© ISO 2001 – All rights reserved

Weigh, to the nearest 0,1 g, 9 g of sodium chloride into a 1 l volumetric flask (5.4) and make up to the mark with deionized water (grade 3, see 4.1). Stir until dissolved.

5 Apparatus

5.1 Apparatus for measuring absorbency under pressure, shown in Figure 1, and consisting of the following elements:

5.1.1 Petri dish or **tray,** of which the bottom surface area is 400 cm^2 per test apparatus.

5.1.2 Filter plate, in ceramic for a filter diameter of 120 mm, of porosity = 0 and at least 5 mm in height.

5.1.3 Filter paper, having a diameter between 70 mm and 120 mm with pore size < 25 µm.

5.1.4 Plexiglas cylinder, having an internal diameter of d_1 = (60 ± 0,2) mm, a height equal to (50 ± 0,5) mm, with a nylon cloth filter screen or stainless steel filter screen in the bottom (400 mesh = 36 µm).

For different diameters see annex A.

5.1.5 Plastic piston, with a **cylindrical weight,** of which the total mass is equal to (574 ± 5) g, corresponding to a surface density of (21 ± 0,2) g/cm^2.

The piston diameter, d_2, is such that $d_1 - d_2$ = (0,8 ± 0,2) mm and the height of the cylindrical weight is (60 ± 0,5) mm.

5.2 Analytical balance, capable of weighing, to the nearest 0,001 g, masses up to 500 g.

5.3 Timer, accurate to 1 s over 1 h.

5.4 Volumetric flask, Grade A of 1 l capacity.

© ISO 2001 – All rights reserved

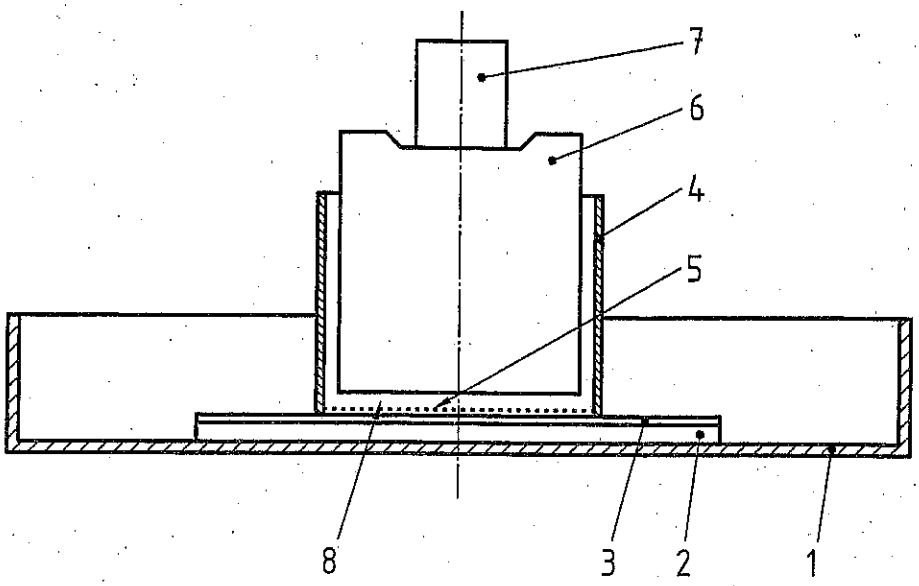

Key

1 Petri dish (or tray)
2 Filter plate
3 Filter paper
4 Plexiglass cylinder
5 Screen
6 Plastic piston
7 Cylindrical weight
8 Test portion

Figure 1 — Apparatus for measuring absorbency, under pressure, of PA superabsorbent powders

6 Sampling

CAUTION — Use respiratory protection, dust mask or fume hood, when handling sample amounts greater than 10 g.

In order to guarantee that a representative sample is taken from the bulk material contained in a large bag or a silo truck, remove the top layer (approximately 20 cm). Take the test sample with a scoop. Place it in an airtight container of adequate size within 3 min after sampling.

Keep the test samples in a closed container and allow them to equilibrate to the ambient laboratory temperature before removing a test portion to run the test. The preferred test conditions are (23 ± 2) °C and (50 ± 10) % relative humidity. If these conditions are not available, test at ambient conditions and report the temperature and relative humidity. Measure these laboratory conditions in accordance with ISO 187.

Before taking a test portion out of the container to run the test, rotate the container three to five times so as to obtain a homogeneous product. Allow the container to sit 5 min before opening the lid and removing the test portion.

Make sure the test portion is substantially free of lumps of size greater than 1 mm in diameter before proceeding with testing.

© ISO 2001 – All rights reserved

7 Procedure

7.1 Weigh, to the nearest 0,005 g, a 0,900 g test portion of PA superabsorbent powder test sample and record the mass, m_S, which corresponds to the designated superabsorbent surface density on the bottom screen of the test cylinder of 0,032 g/cm^2.

7.2 Carefully distribute the test portion onto the filter screen of the clean and dry plexiglass cylinder (5.1.4) to provide an even bed.

7.3 Place the piston (5.1.5) in the cylinder and weigh the completed cylinder apparatus (record the mass as m_A).

7.4 Place the filter plate (5.1.2) in the petri dish (5.1.1).

7.5 Add the sodium chloride solution (4.2) so that the surface of the liquid reaches the same level as the surface of the filter plate.

7.6 Place a round filter paper (5.1.3) on the filter plate (5.1.2), thoroughly wetting it with the sodium chloride solution. Avoid any surface liquid.

7.7 Place the completed apparatus on the damp filter paper simultaneously adding the weight (5.1.5) to the apparatus. Allow the test portion to absorb the saline solution for (60 ± 1) min.

7.8 Lift the complete apparatus and remove the weight. Reweigh the cylinder apparatus (7.3) and record the mass as (m_B).

7.9 Clean the cylinder and piston thoroughly with deionized water and dry. Do not use a drying temperature greater than 40 °C, to prevent damage.

7.10 Repeat 7.1 to 7.9 to obtain a duplicate measurement.

7.11 Wash the filter plate with deionized water.

8 Calculation

For each test portion, calculate the absorption against pressure, w, expressed as a mass fraction (g/g):

$$w = \frac{m_A - m_B}{m_S} \qquad (1)$$

where

m_S is the mass, expressed in grams, of dry test portion;

m_A is the mass, expressed in grams, of the dry cylinder group;

m_B is the mass, expressed in grams, of the cylinder group after suction.

Take the average of the two calculated values.

© ISO 2001 – All rights reserved

9 Precision

The data for the repeatability and reproducibility limits of this method are the result of interlaboratory tests carried out in 1997 by EDANA and are given in annex B.

The absolute difference between two single test results obtained under repeatability test conditions in accordance with ISO 5725-2 shall not exceed the repeatability limit r in more than 5 % of cases:

r = 1,62 (g/g)

The absolute difference between two single test results obtained under reproducibility test conditions in accordance with ISO 5725-2 shall not exceed the reproducibility limit R in more than 5 % of cases:

R = 5,30 (g/g)

If the repeatability and reproducibility test criteria are not met, the test shall be repeated twice, each in duplicate, after ensuring that the original sample is thoroughly mixed. If these criteria are still not met, report the results as unusual, then diagnose the source of error for example by verifying correct operation of the instruments and testing a portion of a material with a known value.

10 Test report

The test report shall include the following information:

a) the name and address of the testing institution;

b) the type of polymer-based absorbent materials, including all technical details and source information required for the complete identification of the sample;

c) a reference to this part of ISO 17190, i.e. ISO 17190-7;

d) the absorption against pressure, expressed as a mass fraction in grams per gram (g/g) to the nearest 0,1 g/g, and the average for duplicate determinations;

e) any unusual features noted during the determination or if the reproducibility and/or repeatability criteria were not met (see clause 9);

f) any deviation from the procedure, or any operations regarded as optional.

© ISO 2001 – All rights reserved

Annex A
(informative)

Recommendations for special cases of different cylinder diameters and pressures

A.1 Different cylinder diameters

If a cylinder of different diameter is used, the mass of the test portion and the mass of the cover plate are to be adjusted according to the following specification:

— the test portion is such that the layer spread on the bottom area of the cylinder has a surface density equal to 0,032 g/cm^2;

— the mass of the piston plus the weight is such that the pressure applied on the superabsorbent layer corresponds to the pressure due to a surface density equal to 21 g/cm^2.

The modified diameter, test portion and cover mass are to be mentioned in the test report.

A.2 Different pressures

If different pressures are applied, they are to be mentioned in the test report.

© ISO 2001 – All rights reserved

Annex B
(informative)

Statistical results of interlaboratory tests

Figures for the repeatability and reproducibility of this method are the result of collaborative studies carried out in 1997 by EDANA. The evaluation of the interlaboratory test was carried out in accordance with ISO 5725-2 and results as follows:

Sample identification	A	B	C
Number of participating laboratories	10	10	10
Number of laboratories whose results were accepted (excluding those whose results were discarded as outliers)	9	9	9
Number of accepted test results	36	36	36
Mean value (g/g)	28,40	30,44	29,86
Repeatability standard deviation (s_r)	0,53	0,49	0,58
Repeatability coefficient of variation	1,85 %	1,60 %	1,94 %
Repeatability limit (r) ($2{,}8 \times s_r$)	1,47	1,36	1,62
Reproducibility standard deviation of reproducibility (s_R)	0,86	1,35	1,89
Reproducibility coefficient of variation	3,03 %	4,42 %	6,33 %
Reproducibility limit (R) ($2{,}8 \times s_R$)	2,41	3,77	5,30

© ISO 2001 – All rights reserved

標準檢驗局
049132

ICS 11.180.20
Price based on 7 pages

© ISO 2001 – All rights reserved

INTERNATIONAL STANDARD

ISO 17190-8

First edition
2001-12-01

Urine-absorbing aids for incontinence — Test methods for characterizing polymer-based absorbent materials —

Part 8: Gravimetric determination of flowrate

Aides pour absorption d'urine — Méthodes d'essai pour caractériser les matériaux absorbants à base de polymères —

Partie 8: Détermination gravimétrique du débit

91. 1. 26
資料中心

Reference number
ISO 17190-8:2001(E)

© ISO 2001

PDF disclaimer

This PDF file may contain embedded typefaces. In accordance with Adobe's licensing policy, this file may be printed or viewed but shall not be edited unless the typefaces which are embedded are licensed to and installed on the computer performing the editing. In downloading this file, parties accept therein the responsibility of not infringing Adobe's licensing policy. The ISO Central Secretariat accepts no liability in this area.

Adobe is a trademark of Adobe Systems Incorporated.

Details of the software products used to create this PDF file can be found in the General Info relative to the file; the PDF-creation parameters were optimized for printing. Every care has been taken to ensure that the file is suitable for use by ISO member bodies. In the unlikely event that a problem relating to it is found, please inform the Central Secretariat at the address given below.

© ISO 2001

All rights reserved. Unless otherwise specified, no part of this publication may be reproduced or utilized in any form or by any means, electronic or mechanical, including photocopying and microfilm, without permission in writing from either ISO at the address below or ISO's member body in the country of the requester.

ISO copyright office
Case postale 56 • CH-1211 Geneva 20
Tel. + 41 22 749 01 11
Fax + 41 22 749 09 47
E-mail copyright@iso.ch
Web www.iso.ch

Printed in Switzerland

© ISO 2001 – All rights reserved

Contents

Page

Foreword iv
Introduction v
1 Scope 1
2 Normative references 1
3 Terms and definitions 1
4 Principle 2
5 Apparatus 2
6 Sampling 3
7 Procedure 3
8 Calculation 3
9 Precision 4
10 Test report 4
Annex A (informative) Statistical results of interlaboratory tests 5

© ISO 2001 – All rights reserved

Foreword

ISO (the International Organization for Standardization) is a worldwide federation of national standards bodies (ISO member bodies). The work of preparing International Standards is normally carried out through ISO technical committees. Each member body interested in a subject for which a technical committee has been established has the right to be represented on that committee. International organizations, governmental and non-governmental, in liaison with ISO, also take part in the work. ISO collaborates closely with the International Electrotechnical Commission (IEC) on all matters of electrotechnical standardization.

International Standards are drafted in accordance with the rules given in the ISO/IEC Directives, Part 3.

The main task of technical committees is to prepare International Standards. Draft International Standards adopted by the technical committees are circulated to the member bodies for voting. Publication as an International Standard requires approval by at least 75 % of the member bodies casting a vote.

Attention is drawn to the possibility that some of the elements of this part of ISO 17190 may be the subject of patent rights. ISO shall not be held responsible for identifying any or all such patent rights.

International Standard ISO 17190-8 was prepared by Technical Committee ISO/TC 173, *Technical systems and aids for disabled or handicapped persons*, Subcommittee SC 3, *Aids for ostomy and incontinence*.

ISO 17190 consists of the following parts, under the general title *Urine-absorbing aids for incontinence — Test methods for characterizing polymer-based absorbent materials*:

— *Part 1: Determination of pH*

— *Part 2: Determination of amount of residual monomers*

— *Part 3: Determination of particle size distribution by sieve fractionation*

— *Part 4: Determination of moisture content by mass loss upon heating*

— *Part 5: Gravimetric determination of free swell capacity in saline solution*

— *Part 6: Gravimetric determination of fluid retention capacity in saline solution after centrifugation*

— *Part 7: Gravimetric determination of absorption under pressure*

— *Part 8: Gravimetric determination of flowrate*

— *Part 9: Gravimetric determination of density*

— *Part 10: Determination of extractable polymer content by potentiometric titration*

— *Part 11: Determination of content of respirable particles*

ISO 17190 is intended to be used in conjunction with ISO 17191, *Urine-absorbing aids for incontinence — Airborne polyacrylate superabsorbent material in the workplace — Determination of the content in respirable dust by sodium atomic absorption spectrometry*.

Annex A of this part of ISO 17190 is given for information only.

© ISO 2001 – All rights reserved

Introduction

ISO 17190 consists of a series of test methods originally developed by *European Disposables and Nonwovens Association (EDANA)*. These test methods have been incorporated without technical changes into one International Standard consisting of eleven parts.

These test methods have been in practical use for several years, and have proven to be reliable with respect to common criteria of quality of test methods (validity, repeatability, etc.). They are applicable to polyacrylate superabsorbent materials, which occur in hygiene products, including urine-absorbing aids for incontinent persons. The test methods are addressed to the *material* exclusively. They are not intended to be used, and are not applicable for use with finished manufactured urine-absorbing aids.

© ISO 2001 – All rights reserved

Urine-absorbing aids for incontinence — Test methods for characterizing polymer-based absorbent materials —

Part 8: Gravimetric determination of flowrate

1 Scope

This part of ISO 17190 specifies a method for determining the mass flowrate of polyacrylate (PA) superabsorbent powders.

This method has been tested in the range 10,62 g/s to 11,93 g/s (see annex A), but it is expected to be applicable to a wider range of mass flowrates.

2 Normative references

The following normative documents contain provisions which, through reference in this text, constitute provisions of this part of ISO 17190. For dated references, subsequent amendments to, or revisions of, any of these publications do not apply. However, parties to agreements based on this part of ISO 17190 are encouraged to investigate the possibility of applying the most recent editions of the normative documents indicated below. For undated references, the latest edition of the normative document referred to applies. Members of ISO and IEC maintain registers of currently valid International Standards.

ISO 187, *Paper, board and pulps — Standard atmosphere for conditioning and testing and procedure for monitoring the atmosphere and conditioning of samples*

ISO 5725-2, *Accuracy (trueness and precision) of measurement methods and results — Part 2: Basic method for the determination of repeatability and reproducibility of a standard measurement method*

ISO/TR 15510, *Stainless steels — Chemical composition*

3 Terms and definitions

For the purposes of this part of ISO 17190, the following terms and definitions apply.

3.1
flowability
time for a mass of the powder to pass through a specified funnel

NOTE The mass of the powder is expressed in grams.

3.2
flowrate
mass of the powder flowing through a specified funnel per unit time

NOTE 1 Flowrate is expressed in grams per second.

NOTE 2 For the purposes of simplification of this part of ISO 17190, "flowrate" is used to mean "mass flowrate".

© ISO 2001 – All rights reserved

4 Principle

The flowability of PA superabsorbent powders is determined by pouring a representative sample through a specified funnel and recording the time required for the entire sample to flow out of the funnel. The mass of the sample is divided by the time recorded to calculate the flowrate.

5 Apparatus

5.1 Funnel with an orifice damper (see Figure 1), made of polished stainless steel (steel designation X5CrNiMo17-12-3 specified in ISO/TR 15510) having the following characteristics:

— orifice internal diameter (10 ± 0,01) mm

— inclination angle of cone generatrix 20°

— height (145 ± 0,5) mm.

5.2 Funnel brush.

5.3 Spatula, spoon or V-shaped.

5.4 Analytical balance, capable of weighing, to the nearest 0,01 g, masses up to 100,00 g.

5.5 Utility tray, 40 cm × 25 cm × 6 cm.

5.6 Beakers, two of 250 ml capacity.

5.7 Ring stand, capable of holding the funnel in the ring.

Dimensions in millimetres

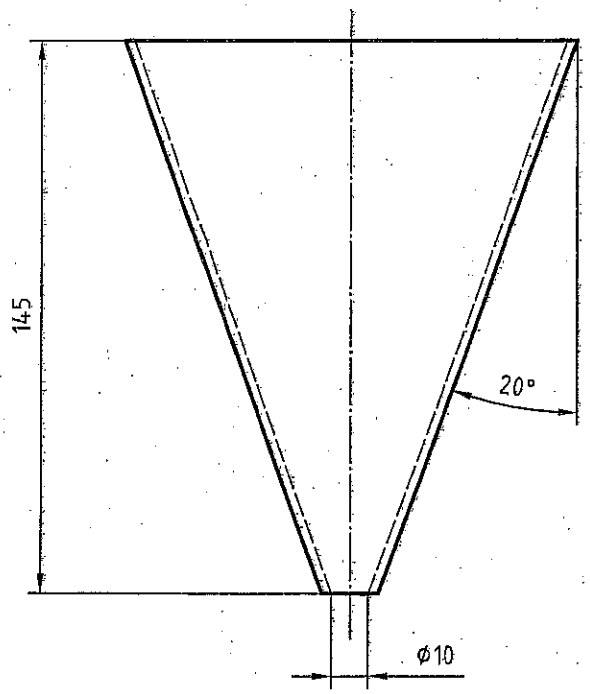

Figure 1 — Determination of flowrate using funnel

© ISO 2001 – All rights reserved

6 Sampling

CAUTION — Use respiratory protection, dust mask or fume hood, when handling sample amounts greater than 10 g.

In order to guarantee that a representative sample is taken from the bulk material contained in a large bag or a silo truck, remove the top layer (approximately 20 cm). Take the test sample with a scoop. Place it in an airtight container of adequate size within 3 min after sampling.

Keep the test samples in a closed container and allow them to equilibrate to the ambient laboratory temperature before removing a test portion to run the test. The preferred test conditions are (23 ± 2) °C and (50 ± 10) % relative humidity. If these conditions are not available, test at ambient conditions and report the temperature and relative humidity. Measure these laboratory conditions in accordance with ISO 187.

Before taking a test portion out of the container to run the test, rotate the container three to five times so as to obtain a homogeneous product. Allow the container to sit 5 min before opening the lid and removing the test portion.

Make sure the test portion is substantially free of lumps of size greater than 1 mm in diameter before proceeding with testing.

7 Procedure

7.1 Place the funnel (5.1) into the ring of the ring stand (5.7). Then place the ring stand holding the funnel into the utility tray (5.5).

7.2 Weigh, to the nearest 0,01 g, a 100,00 g test portion (m_s) from the PA superabsorbent powder test sample into a 250 ml beaker (5.6).

7.3 Close the orifice damper located at the bottom of the funnel and pour the test portion along wall of the funnel to avoid settling.

7.4 Place a container (e.g. a beaker, see 5.6) directly beneath the orifice of the funnel.

7.5 Open the orifice damper and immediately start the timer.

7.6 Stop the timer when the last portion of the test portion empties out of the funnel, and read the time (t) in seconds.

7.7 Carry out at least two determinations on the same well-mixed laboratory sample, in rapid succession by the same analyst.

7.8 The funnel should be cleaned with the funnel brush (5.2) to remove any remaining polymer.

8 Calculation

The flowability is the time (t) in seconds for the 100 g test portion to pass through the funnel. Report the flowability to the nearest 0,1 s.

© ISO 2001 – All rights reserved

Calculate the flowrate, q, expressed in grams per second (g/s), for each 100-g test portion:

$$q = \frac{m_s}{t}$$

where

m_s is the mass, expressed in grams, of the test portion;

t is the time, expressed in seconds, for the test portion to pass through the funnel.

Report the flowrate for each test portion to the nearest 0,1 g/s.

Calculate the average flowrate for the sample from the two tests results obtained.

9 Precision

The data for the repeatability and reproducibility limits of this method are the result of interlaboratory tests carried out in 1997 by EDANA and are given in annex A.

The absolute difference between two single test results obtained under repeatability test conditions in accordance with ISO 5725-2 shall not exceed the repeatability limit r in more than 5 % of cases:

r = 0,48 g/s

The absolute difference between two single test results obtained under reproducibility test conditions in accordance with ISO 5725-2 shall not exceed the reproducibility limit R in more than 5 % of cases:

R = 5,23 g/s

If the repeatability and reproducibility test criteria are not met, the test shall be repeated twice, each in duplicate, after ensuring that the original sample is thoroughly mixed. If these criteria are still not met, report the results as unusual, then diagnose the source of error for example by verifying correct operation of the instruments and testing a portion of a material with a known value.

10 Test report

The test report shall include the following information:

a) the name and address of the testing institution;

b) the type of polymer-based absorbent materials, including all technical details and source information required for the complete identification of the sample;

c) a reference to this part of ISO 17190, i.e. ISO 17190-8;

d) whether or not lumps were present in the sample;

e) the results of the flowrate for each test portion, expressed as grams per second (g/s) to the nearest 0,1 g/s, and the average value for duplicate determinations;

f) any unusual features noted during the determination or if the reproducibility and/or repeatability criteria were not met (see clause 9);

g) any deviation from procedure, or any operations regarded as optional.

© ISO 2001 – All rights reserved

Annex A
(informative)

Statistical results of interlaboratory tests

Figures for the repeatability and reproducibility of this method are the result of collaborative studies carried out in 1997 by EDANA. The evaluation of the interlaboratory test was carried out in accordance with ISO 5725-2 and results as follows:

Sample identification	A	B	C
Number of participating laboratories	10	10	10
Number of laboratories whose results were accepted (excluding those whose results were discarded as outliers)	10	10	10
Number of accepted test results	40	40	40
Mean value (g/s)	10,94	10,62	11,93
Repeatability standard deviation (s_r)	0,12	0,17	0,15
Repeatability coefficient of variation	1,07 %	1,61 %	1,28 %
Repeatability limit (r) ($2{,}8 \times s_r$)	0,33	0,48	0,43
Reproducibility standard deviation of reproducibility (s_R)	1,87	1,82	1,73
Reproducibility coefficient of variation	17,07 %	17,18 %	14,46 %
Reproducibility limit (R) ($2{,}8 \times s_R$)	5,23	5,11	4,83

© ISO 2001 – All rights reserved

標準檢驗局
049131

ICS 11.180.20
Price based on 5 pages

© ISO 2001 – All rights reserved

INTERNATIONAL STANDARD

ISO 17190-9

First edition
2001-12-01

Urine-absorbing aids for incontinence — Test methods for characterizing polymer-based absorbent materials —

Part 9: Gravimetric determination of density

Aides pour absorption d'urine — Méthodes d'essai pour caractériser les matériaux absorbants à base de polymères —

Partie 9: Détermination gravimétrique de la masse volumique

標準檢驗局
內部公務使用

經濟部標準檢驗局
91. 1. 26
資料中心

Reference number
ISO 17190-9:2001(E)

© ISO 2001

PDF disclaimer

This PDF file may contain embedded typefaces. In accordance with Adobe's licensing policy, this file may be printed or viewed but shall not be edited unless the typefaces which are embedded are licensed to and installed on the computer performing the editing. In downloading this file, parties accept therein the responsibility of not infringing Adobe's licensing policy. The ISO Central Secretariat accepts no liability in this area.

Adobe is a trademark of Adobe Systems Incorporated.

Details of the software products used to create this PDF file can be found in the General Info relative to the file; the PDF-creation parameters were optimized for printing. Every care has been taken to ensure that the file is suitable for use by ISO member bodies. In the unlikely event that a problem relating to it is found, please inform the Central Secretariat at the address given below.

© ISO 2001

All rights reserved. Unless otherwise specified, no part of this publication may be reproduced or utilized in any form or by any means, electronic or mechanical, including photocopying and microfilm, without permission in writing from either ISO at the address below or ISO's member body in the country of the requester.

ISO copyright office
Case postale 56 • CH-1211 Geneva 20
Tel. + 41 22 749 01 11
Fax + 41 22 749 09 47
E-mail copyright@iso.ch
Web www.iso.ch

Printed in Switzerland

Contents

Page

Foreword iv
Introduction v
1 Scope 1
2 Normative references 1
3 Term and definition 1
4 Principle 2
5 Apparatus 2
6 Sampling 3
7 Procedure 4
8 Calculation 4
9 Precision 5
10 Test report 5
Annex A (informative) Statistical results of interlaboratory tests 6

© ISO 2001 – All rights reserved

Foreword

ISO (the International Organization for Standardization) is a worldwide federation of national standards bodies (ISO member bodies). The work of preparing International Standards is normally carried out through ISO technical committees. Each member body interested in a subject for which a technical committee has been established has the right to be represented on that committee. International organizations, governmental and non-governmental, in liaison with ISO, also take part in the work. ISO collaborates closely with the International Electrotechnical Commission (IEC) on all matters of electrotechnical standardization.

International Standards are drafted in accordance with the rules given in the ISO/IEC Directives, Part 3.

Draft International Standards adopted by the technical committees are circulated to the member bodies for voting. Publication as an International Standard requires approval by at least 75 % of the member bodies casting a vote.

Attention is drawn to the possibility that some of the elements of this part of ISO 17190 may be the subject of patent rights. ISO shall not be held responsible for identifying any or all such patent rights.

International Standard ISO 17190-9 was prepared by Technical Committee ISO/TC 173, *Technical systems and aids for disabled or handicapped persons*, Subcommittee SC 3, *Aids for ostomy and incontinence*.

ISO 17190 consists of the following parts, under the general title *Urine-absorbing aids for incontinence — Test methods for characterizing polymer-based absorbent materials*:

— *Part 1: Determination of pH*

— *Part 2: Determination of amount of residual monomers*

— *Part 3: Determination of particle size distribution by sieve fractionation*

— *Part 4: Determination of moisture content by mass loss upon heating*

— *Part 5: Gravimetric determination of free swell capacity in saline solution*

— *Part 6: Gravimetric determination of fluid retention capacity in saline solution after centrifugation*

— *Part 7: Gravimetric determination of absorption under pressure*

— *Part 8: Gravimetric determination of flowrate*

— *Part 9: Gravimetric determination of density*

— *Part 10: Determination of extractable polymer content by potentiometric titration*

— *Part 11: Determination of content of respirable particles*

ISO 17190 is intended to be used in conjunction with ISO 17191, *Urine-absorbing aids for incontinence — Airborne polyacrylate superabsorbent material in the workplace — Determination of the content in respirable dust by sodium atomic absorption spectrometry*.

Annex A of this part of ISO 17190 is given for information only.

© ISO 2001 – All rights reserved

Introduction

ISO 17190 consists of a series of test methods originally developed by *European Disposables and Nonwovens Association (EDANA)*. These test methods have been incorporated without technical changes into one International Standard consisting of eleven parts.

These test methods have been in practical use for several years, and have proven to be reliable with respect to common criteria of quality of test methods (validity, repeatability, etc.). They are applicable to polyacrylate superabsorbent materials, which occur in hygiene products, including urine-absorbing aids for incontinent persons. The test methods are addressed to the *material* exclusively. They are not intended to be used, and are not applicable for use with finished manufactured urine-absorbing aids.

© ISO 2001 – All rights reserved

Urine-absorbing aids for incontinence — Test methods for characterizing polymer-based absorbent materials —

Part 9: Gravimetric determination of density

1 Scope

This part of ISO 17190 specifies a method for determining the apparent density of polyacrylate (PA) superabsorbent powders.

This method has been tested in the range 0,67 g/ml to 0,72 g/ml (see annex A), but it is expected to be applicable to a wider range.

2 Normative references

The following normative documents contain provisions which, through reference in this text, constitute provisions of this part of ISO 17190. For dated references, subsequent amendments to, or revisions of, any of these publications do not apply. However, parties to agreements based on this part of ISO 17190 are encouraged to investigate the possibility of applying the most recent editions of the normative documents indicated below. For undated references, the latest edition of the normative document referred to applies. Members of ISO and IEC maintain registers of currently valid International Standards.

ISO 187, *Paper, board and pulps — Standard atmosphere for conditioning and testing and procedure for monitoring the atmosphere and conditioning of samples*

ISO 5725-2, *Accuracy (trueness and precision) of measurement methods and results — Part 2: Basic method for the determination of repeatability and reproducibility of a standard measurement method*

ISO/TR 15510, *Stainless steels — Chemical composition*

3 Term and definition

For the purposes of this part of ISO 17190, the following term and definition applies.

3.1
apparent density
mass of unit volume of the powder after free fall

NOTE Apparent density is expressed in grams per millilitre.

© ISO 2001 – All rights reserved

4 Principle

The apparent density of PA superabsorbent powders is determined by pouring a representative sample through a specified funnel into a density cup. The mass, expressed in grams, of the sample in the cup is divided by the volume, expressed in millilitres, of the density cup to calculate the apparent density of the polymer.

5 Apparatus

5.1 Density cup (see Figure 1), consisting of a stainless-steel cylinder, smoothly finished inside (steel designation X5CrNiMo17-12-3 specified in ISO/TR 15510), having the following characteristics:

— capacity (100 ± 0,5) ml

— internal diameter (45 ± 0,1) mm

— internal height (h) (63,1 ± 0,1) mm

5.2 Funnel with an orifice damper (see Figure 1), made of polished stainless steel (steel designation X5CrNiMo17-12-3 specified in ISO/TR 15510) having the following characteristics:

— orifice internal diameter (10 ± 0,01) mm

— inclination angle of cone generatrix 20°

— height (145 ± 0,5) mm.

5.3 Funnel brush.

5.4 Spatula, square-ended with a flat blade or spoon or V-shaped.

5.5 Analytical balance, capable of weighing to the nearest 0,01 g for test specimens with a mass of 100,00 g.

5.6 Utility tray, 40 cm × 25 cm × 6 cm.

5.7 Beaker, of 250 ml capacity.

5.8 Ring stand, capable of holding the funnel in the ring.

© ISO 2001 – All rights reserved

Dimensions in millimetres

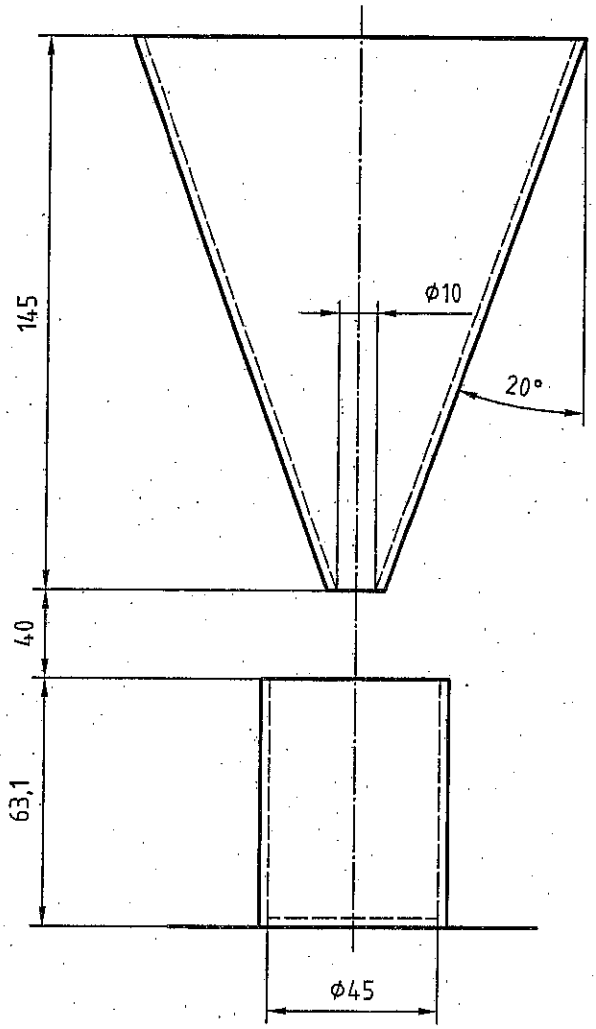

Figure 1 — Funnel and density cup

6 Sampling

CAUTION — Use respiratory protection, dust mask or fume hood, when handling sample amounts greater than 10 g.

In order to guarantee that a representative sample is taken from the bulk material contained in a large bag or a silo truck, remove the top layer (approximately 20 cm). Take the test sample with a scoop. Place it in an airtight container of adequate size within 3 min after sampling.

Keep the test samples in a closed container and allow them to equilibrate to the ambient laboratory temperature before removing a test portion to run the test. The preferred test conditions are (23 ± 2) °C and (50 ± 10) % relative humidity. If these conditions are not available, test at ambient conditions and report the temperature and relative humidity. Measure these laboratory conditions in accordance with ISO 187.

Before taking a test portion out of the container to run the test, rotate the container three to five times so as to obtain a homogeneous product. Allow the container to sit 5 min before opening the lid and removing the test portion.

Make sure the test portion is substantially free of lumps of size greater than 1 mm in diameter before proceeding with testing.

© ISO 2001 – All rights reserved

7 Procedure

7.1 Place the funnel (5.2) into the ring of the ring stand (5.8). Then place the ring stand holding the funnel into the utility tray (5.6) and the density cup directly beneath the orifice of the funnel. Adjust the height of the funnel outlet to (40 ± 1) mm above the top of the density cup.

7.2 Weigh the density cup to the nearest 0,01 g and record the mass as m_1.

7.3 Weigh, to the nearest 0,01 g, a 100,00 g test portion from the PA superabsorbent powder test sample into a 250 ml beaker.

7.4 Close the orifice damper located at the bottom of the funnel and pour the test portion along wall of the funnel to avoid settling.

7.5 Then completely open the orifice damper and allow the test portion to completely fill and overflow the density cup.

7.6 Gently rotate the funnel away from the density cup and allow the remainder of the sample to spill into the utility tray.

7.7 Using a spatula with the flat blade (5.4) held perpendicular to the top of the cup, level off the sample flush with the top of the cup to remove any excess PA superabsorbent powder. Tap the cup gently to settle the sample to avoid spilling during transfer to the balance.

7.8 Weigh the density cup containing the sample to the nearest 0,01 g and record the mass as m_2.

7.9 Carry out at least two determinations on the same well-mixed laboratory sample, in rapid succession by the same analyst.

7.10 Clean the density cup and the funnel using the funnel brush (5.3).

8 Calculation

The apparent density, ρ, expressed in grams per millilitre, of the PA superabsorbent powder is calculated as follows:

$$\rho = \frac{m_2 - m_1}{100}$$

where

m_1 is the mass, expressed in grams, of the density cup;

m_2 is the mass, expressed in grams, of the density cup containing the test portion;

100 is the volume, expressed in millilitres, of the density cup.

Report this value to the nearest 0,01 g/ml.

Calculate the average apparent density for the sample from the results obtained from the two or more test runs.

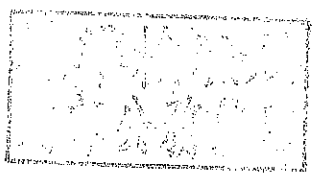

© ISO 2001 – All rights reserved

9 Precision

The data for the repeatability and reproducibility limits of this method are the result of interlaboratory tests carried out in 1997 by EDANA and are given in annex A.

The absolute difference between two single test results obtained under repeatability test conditions in accordance with ISO 5725-2 shall not exceed the repeatability limit r in more than 5 % of cases:

r = 0,02 g/ml

The absolute difference between two single test results obtained under reproducibility test conditions in accordance with ISO 5725-2 shall not exceed the reproducibility limit R in more than 5 % of cases:

R = 0,08 g/ml

If the repeatability and reproducibility test criteria are not met, the test shall be repeated twice, each in duplicate, after ensuring that the original sample is thoroughly mixed. If these criteria are still not met, report the results as unusual, then diagnose the source of error for example by verifying correct operation of the instruments and testing a portion of a material with a known value.

10 Test report

The test report shall include the following information:

a) the name and address of the testing institution;

b) the type of polymer-based absorbent materials, including all technical details and source information required for the complete identification of the sample;

c) a reference to this part of ISO 17190, i.e. ISO 17190-9;

d) whether or not lumps were present in the sample;

e) the results of the apparent density for each test portion, expressed in grams per millilitre (g/ml) to the nearest 0,1 g/ml, and the average value for duplicate determinations;

f) any unusual features noted during the determination or if the reproducibility and/or repeatability criteria were not met (see clause 9);

g) any deviation from the procedure, or any operations regarded as optional.

© ISO 2001 – All rights reserved

Annex A
(informative)

Statistical results of interlaboratory tests

Figures for the repeatability and reproducibility of this method are the result of collaborative studies carried out in 1997 by EDANA. The evaluation of the interlaboratory test was carried out in accordance with ISO 5725-2 and results as follows:

Sample identification	A	B	C
Number of participating laboratories	10	10	10
Number of laboratories whose results were accepted (excluding those whose results were discarded as outliers)	10	10	10
Number of accepted test results	40	40	40
Mean value (g/s)	10,94	10,62	11,93
Repeatability standard deviation (s_r)	0,12	0,17	0,15
Repeatability coefficient of variation	1,07 %	1,61 %	1,28 %
Repeatability limit (r) ($2{,}8 \times s_r$)	0,33	0,48	0,43
Reproducibility standard deviation of reproducibility (s_R)	1,87	1,82	1,73
Reproducibility coefficient of variation	17,07 %	17,18 %	14,46 %
Reproducibility limit (R) ($2{,}8 \times s_R$)	5,23	5,11	4,83

© ISO 2001 – All rights reserved

INTERNATIONAL STANDARD ISO 17190-9:2001
TECHNICAL CORRIGENDUM 1

Published 2002-10-15

INTERNATIONAL ORGANIZATION FOR STANDARDIZATION • МЕЖДУНАРОДНАЯ ОРГАНИЗАЦИЯ ПО СТАНДАРТИЗАЦИИ • ORGANISATION INTERNATIONALE DE NORMALISATION

Urine-absorbing aids for incontinence — Test methods for characterizing polymer-based absorbent materials —

Part 9: Gravimetric determination of density

TECHNICAL CORRIGENDUM 1

Aides pour absorption d'urine — Méthodes d'essai pour caractériser les matériaux absorbants à base de polymères —

Partie 9: Détermination gravimétrique de la masse volumique

RECTIFICATIF TECHNIQUE 1

Technical Corrigendum 1 to ISO 17190-9:2001 was prepared by Technical Committee ISO/TC 173, *Technical systems and aids for disabled or handicapped persons*, Subcommittee SC 3, *Aids for ostomy and incontinence*.

'91. 11. 29
資料中

ICS 11.180.20

Ref. No. ISO 17190-9:2001/Cor.1:2002(E)

© ISO 2002 – All rights reserved

Published in Switzerland

Page 6

Annex A (informative)

Statistical results of interlaboratory tests

Replace the existing table with the following table of results:

Sample identification	A	B	C
Number of participating laboratories	10	10	10
Number of laboratories whose results were accepted (excluding those whose results were discarded as outliers)	10	9	10
Number of accepted test results	40	36	40
Mean value (g/ml)	0,67	0,69	0,72
Repeatability standard deviation (s_r)	0,00	0,01	0,00
Repeatability coefficient of variation	0,70 %	0,85 %	0,56 %
Repeatability limit (r) (2,8 × s_r)	0,01	0,02	0,01
Reproducibility standard deviation of reproducibility (s_R)	0,02	0,01	0,03
Reproducibility coefficient of variation	2,38 %	2,17 %	3,89 %
Reproducibility limit (R) (2,8 × s_R)	0,04	0,04	0,08

© ISO 2002 – All rights reserved

標準檢驗局
049130

ICS 11.180.20
Price based on 6 pages

© ISO 2001 – All rights reserved