Taiwan-Japan Enterprises Cooperation Information (1/24)

No	Company information	
1	Company name (企業名)	(日本語) 株式会社トプスシステムズ
		(英語) TOPS Systems Corp.
2	Address (所在地)	(日本語) 茨城県つくば市竹園 1-6-1 つくば三井ビル 5 階
		(英語) Tsukuba Mitsui Building 5F 1-6-1 Takezono, Tsukuba
3	Representative (代表者名)	(日本語) 松本 祐教
		(英語) Yukoh Matsumoto, Ph.D.
4	Industry field (産業分類)	Information Technology Provider / Semiconductor - Microprocessor IP Provider (Multicore, Manycore)
5	Phone number (電話番号)	+81-29-851-2005
6	FAX	+81-29-875-8634
7	E-Mail	yukoh@topscom.co.jp
8	Website	http://www.topscom.co.jp
9	Business description (事業内容)	- R&D of Microprocessor, Semiconductor, and Software Technology - Licensing of Multicore / Manycore Processor IPs - Parallel Processing Software Development for Manycore Processors
10	Product (主力商品)	SMYLEvideo(Gen-2) Manycore Processor
11	Established in (創業･設立)	1999 年 12 月
12	Personnel (従業員等数)	Management (役員): 3 Formal & Contract (正社員・契約社員): 7 Part time (パート等): 0
13	Domestic location (国内拠点)	Tsukuba Mitsui Building 5F 1-6-1 Takezono, Tsukuba, Ibaraki 305-0032 JAPAN
14	International location (海外拠点)	TOPS Systems America Corp. 1608 SHREEN CT SAN JOSE, CA 96124 U.S.A.
15	Main distributor or partner in domestic (主要国内取引先	Denso TOYOTA Motor Corp. NEDO New Energy and Industrial Technology Development Organization

	または協力業者)	Mitsubishi UFJ Morgan Stanley		
16	International trading partner (主要海外取引先)	LG Electronics		
Finance information				
17	Capital(資本金)	Yen 100M		
		2014	2015	2016(forecast)
18	Sales revenue (売上高)			
19	Revenue (経常利益)			
20	Profit (当期利益)			
Contact information				
21	Supervisor (業務責任者)	Name：Yukoh Matsumoto　Division：　　Title：President & CEO		
		TEL :029-851-2005 FAX :029-875-8634 Mobile phone :080-5536-4411		
		E-MAIL：yukoh@topscom.co.jp		
		Address：Tsukuba Mitsui Building 5F, 1-6-1 Takezono, Tsukuba, Ibaraki		
22	Contact person (連絡担当者)	Name：Yukoh Matsumoto　Division：　　Title：President & CEO		
		TEL :029-851-2005 FAX :029-875-8634 Mobile phone :080-5536-4411		
		E-MAIL：yukoh@topscom.co.jp		
		Address：Tsukuba Mitsui Building 5F, 1-6-1 Takezono, Tsukuba, Ibaraki		
		Language you may use： （When communicate with Taiwan's entrepreneurs you may use） ☑ Japanese　☑ English　□ Mandarin　□ Others：_____		
Technology or product information				
23	Name (技術・製品の名称)	SMYLEvideo(Gen-2) Manycore Processor IP		

24	Description (技術・製品の内容)	Manycore Processor IP for Computer Vision and AI (Deep Learning) that provides high-level of Programmability, High-Performance, Low-Power Small, and Scalability with the number of cores as well as clock frequency. - Configurable Manycore Platform - Proprietary Processor Core (ISA and Microarchitecture) - Proprietary Zero-Overhead Inter-Core Communications (Patent)
25	Photos (写真等)	Organization of SMYLEvideo(Gen-2) 8 core version 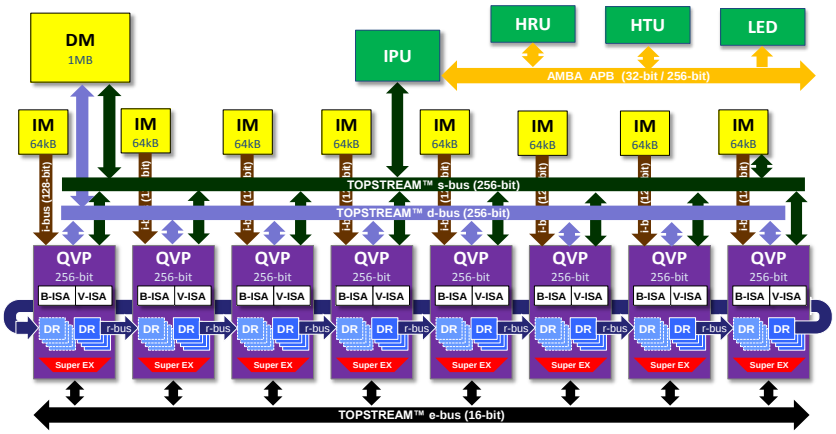 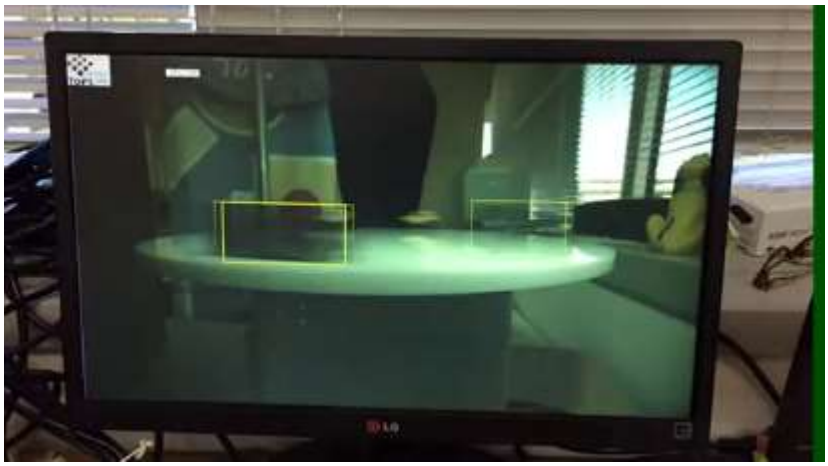 Object Detection (more than 150fps with only 8 cores operating at 50MHz)
26	Features (including innovation, superiority, difference)	Example application is the world fastest object detection with Dataflow based stream processing on SMYLEvideo(Gen-2) Manycore achieved more than 150fps (5 times) of Object Detection speed with 8 cores running at only 50MHz (1/52 of clock frequency). Amount of memory access is reduced to 1/280 compared to a conventional CPU.

	(技術・製品の特徴（競合他社の類似商品と比較した場合の優位性や革新性）)	8 core configuration of SMYLEvideo(Gen-2) is estimated less than 8Mgate and 1.5MByte of SRAM, and its estimated chip size is 4mm x 4mm and consumes less than 700mW at 40nm CMOS Technology. The number of core as well as clock frequency of SMYLEvideo(Gen-2) could be scalable from 8 to 128 cores, and 100MHz up to 800MHz, according to its applications.
27	ISO or other certificates (免許、許認可、特許、ISO など)	Patents : 14 in Japan, and 1 in US. In the field of Microprocessor, Parallel Processing, 3D-LSI stacking, Simulation, Security, etc.
Matching information		
28	Cooperation method (multiple choice) (マッチングニーズタイプ) (貴社のニーズタイプをお選びください。複数選択可。)	□Intellectual property right introduce (知的財産導入) ☑Export Intellectual property rights (知的財産輸出) □Looking for technology (技術を探す) ☑Technology transfer to Taiwan (技術を提供する（技術移転）) □Looking for vendors (供給先を探す（仕入れたい）) ☑Looking for buyer (提供先を探す（販売したい）) □Looking for product as agent (代理販売する/ブランドを探す) □Looking for agents (代理店を探す) ☑Looking for funding (資本調達) □Looking for investment target (投資先を探す) ☑Looking for R&D partnership (研究開発パートナーを探す) □Looking for funding (with share) (合資パートナーを探す) □ Others (その他)_____
29	Description for matching target (ニーズ具体的内容)	Looking for an early adopter of SMYLEvideo(Gen-2) Manycore IP who provides evolutional ASSP manycore chips to world-wide emerging market for Computer Vision and AI applications, especially as the only one processor for Software Defined Sensor system.

30	Description for matching means (希望アプローチ先)	□materials(素材) □components(部品) □manufacturer (装置メーカー) □product user (製品ユーザー) □agents (代理店) ☑others (その他) _ (with company names that you would like to cooperate with, would be better; 具体的な企業名があればご教示ください)__MediaTek _____ technology/equipment (技術/設備)___Microprocessor IP _____
Information management		
31	Date of filling information (資料記入日)	2016 年 7 月 19 日

Taiwan-Japan Enterprises Cooperation Information (2/24)

No	Company information	
1	Company name (企業名)	（日本語）株式会社 SIJ テクノロジ
		（英語）SIJTechnology, Inc.
2	Address (所在地)	（日本語）茨城県つくば市東光台 5-9-5
		（英語）5-9-5 Tokodai, Tsukuba, Ibaraki, Japan
3	Representative (代表者名)	（日本語）村田 和広
		（英語）Kazuhiro Murata
4	Industry field (産業分類)	貴社の産業分類をご記入してください：the manufacturing industry
5	Phone number (電話番号)	+81-29-896-5110
6	FAX	+81-29-896-5111
7	E-Mail	info@sijtechnology.com
8	Website	http://www.sijtechnology.com/en
9	Business description (事業内容)	Manufacture and sales about Super Inkjet products
10	Product (主力商品)	Super Inkjet Printer
11	Established in (創業･設立)	2005 年 4 月
12	Personnel (従業員等数)	
13	Domestic location (国内拠点)	Ibaraki Tokyo
14	International location (海外拠点)	No
15	Main distributor or partner in domestic (主要国内取引先または協力業者)	University, National institute, R&D department of company
16	International trading partner	University, National institute, R&D department of company

	(主要海外取引先)			
Finance information				
17	Capital(資本金)	Non-disclosure		
		2015	2016	2017(forecast)
18	Sales revenue (売上高)	Non-disclosure	Non-disclosure	Non-disclosure
19	Revenue (経常利益)	Non-disclosure	Non-disclosure	Non-disclosure
20	Profit (当期利益)	Non-disclosure	Non-disclosure	Non-disclosure
Contact information				
21	Supervisor (業務責任者)	Name：Kazuhiro Murata Title：CEO		
		TEL：+81-29-896-5110 FAX：+81-29-896-5111		
		E-MAIL：k-murata@sijtechnology.com		
		Address：5-9-5 Tokodai, Tsukuba, Ibaraki, Japan		
22	Contact person (連絡担当者)	Name：Kotaro Shimizu Division：Development & Marketing Title：Manager		
		TEL：+81-29-896-5110 FAX：+81-29-896-5111		
		E-MAIL：k-shimizu@sijtechnology.com		
		Address：5-9-5 Tokodai, Tsukuba, Ibaraki, Japan		
		Language you may use： （When communicate with Taiwan's entrepreneurs you may use） ■ Japanese ■ English □ Mandarin □ Others：_____		
Technology or product information				
23	Name (技術・製品の名称)	Super Inkjet Printer		
24	Description (技術・製品の内容)	Super inkjet(SIJ) technology is an advanced inkjet microdeposition technology. It allows for ultra-precision printing down to the submicrometer scale by producing ultra-microscopic droplets which are 1/1000th of the volume of conventional inkjet droplets. We have experience in using a wide range of functional fluids such as conductive ink, Insulating ink, resist ink, UV ink, solvent ink, protein material, etc.		
25	Photos			

	(写真等)	Super Inkjet Printer 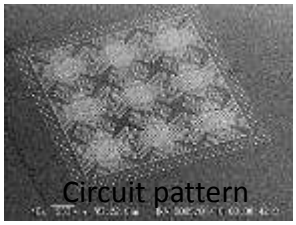 Circuit pattern 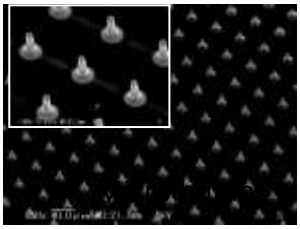
26	Features (including innovation, superiority, difference) (技術・製品の特徴（競合他社の類似商品と比較した場合の優位性や革新性）)	Super Inkjet technology developed by the National Institute of Advanced Industrial Science and Technology (AIST). Allows the ejection of super-fine droplets much smaller than the droplets ejected by a conventional inkjet printer - 1/10 smaller in size and 1/1000 smaller in volume. Super Inkjet printer is compact and can be placed on a desktop. The printer allows single micron scale patterns comparable to the photolithographic methods to be drawn directly under normal temperature and normal atmospheric pressure. ◆Super fine patterning Droplet volume：0.1fl(femtoliter) ~ 10pl(picoliter) ◆Wide range of viscosity Viscosity range：0.5 ~ 10,000cps(non-heated) ◆Large variety of usable fluids
27	ISO or other certificates (免許、許認可、特許、ISO など)	CE marking
Matching information		
28	Cooperation method (multiple choice) (マッチングニーズタイプ) (貴社のニーズタイプをお選びください。複数選択可。)	□Intellectual property right introduce (知的財産導入) ■Looking for technology (技術を探す) ■Looking for vendors (供給先を探す（仕入れたい）) □Looking for product as agent (代理販売する/ブランドを探す) □Looking for funding (資本 □Export Intellectual property rights (知的財産輸出) □Technology transfer to Taiwan (技術を提供する（技術移転）) ■Looking for buyer (提供先を探す（販売したい）) □Looking for agents (代理店を探す) □Looking for investment target

		調達) (投資先を探す) ■Looking for R&D partnership (研究開発パートナーを探す) □Looking for funding (with share) (合資パートナーを探す) □ Others (その他)_____
29	Description for matching target (ニーズ具体的内容)	Target field ■Advanced technology ・Printable electronics ・Solar-cells ・Touch panels ・LEDs ■Alternative technology ・Partial platings ・Resists coating ・Bumps forming ・Dispenser devices ■Optics technology ・Photomasks ・Microlenses ・Microfilters ■Biotechnology ・Pipetting device of protein material ・Cell scaffolds ・Microarrays
30	Description for matching means (希望アプローチ先)	■materials(素材) ■components(部品) ■manufacturer (装置メーカー) ■product user (製品ユーザー) □agents (代理店) □others (その他) _ (with company names that you would like to cooperate with, would be better; 具体的な企業名があればご教示ください) ITRI, 国立台湾大学、国立清華大学、国立交通大学、国立成功大学、国立中央大学、国立中興大学、国立中山大学、台北医学大学、国立台湾科技大学、長庚大学 など technology/equipment (技術/設備)_____
Information management		
31	Date of filling information (資料記入日)	2017 年 5 月 26 日

Taiwan-Japan Enterprises Cooperation Information (3/24)

No	Company information	
1	Company name (企業名)	（日本語）株式会社ピコサーム
		（英語）PicoTherm Corporation
2	Address (所在地)	（日本語）〒305-0047 茨城県つくば市千現二丁目 1 番 6 号
		（英語）2-1-6 Sengen, Tsukuba, Ibaraki 305-0047 Japan
3	Representative (代表者名)	（日本語）石川 佳寿子
		（英語）Kazuko Ishikawa
4	Industry field (産業分類)	貴社の産業分類をご記入してください： 分析機器製造業
5	Phone number (電話番号)	+81-29-828-7540
6	FAX	+81-29-828-7541
7	E-Mail	mail@pico-therm.com
8	Website	http://www.pico-therm.com https://www.facebook.com/picotherm
9	Business description (事業内容)	1. Development / Manufacturing / Sales of Thermal Analysis System 2. Thermal Analysis Service for Thin Film
10	Product (主力商品)	1. Thermal Analysis System - NanoTR 2. Thermal Analysis System - PicoTR
11	Established in (創業·設立)	2008 年 5 月
12	Personnel (従業員等数)	----
13	Domestic location (国内拠点)	Tsukuba
14	International location (海外拠点)	----
15	Main distributor or partner in domestic (主要国内取引先または協力業者)	Netzsch https://www.netzsch-thermal-analysis.com

16	International trading partner (主要海外取引先)	----		
Finance information				
17	Capital(資本金)	8,000,000 yen		
		2015	2016	2017(forecast)
18	Sales revenue (売上高)			
19	Revenue (経常利益)			
20	Profit (当期利益)			
Contact information				
21	Supervisor (業務責任者)	Name：Kazuko Ishikawa Division： - Title：President		
		TEL：+81-29-828-7540 FAX：+81-29-828-7541 Mobile phone：+81-90-8700-7157		
		E-MAIL：k-ishikawa@pico-therm.com		
		Address：2-1-6 Sengen, Tsukuba, Ibaraki 305-0047 Japan		
22	Contact person (連絡担当者)	Name：Kazuko Ishikawa Division： - Title：President		
		TEL：+81-29-828-7540 FAX：+81-29-828-7541 Mobile phone：+81-90-8700-7157		
		E-MAIL：k-ishikawa@pico-therm.com		
		Address：2-1-6 Sengen, Tsukuba, Ibaraki 305-0047 Japan		
		Language you may use： （When communicate with Taiwan's entrepreneurs you may use） ☑ Japanese ☑ English □ Mandarin □ Others：_____		
Technology or product information				
23	Name (技術・製品の名称)	1. Thermal Analysis System - NanoTR 2. Thermal Analysis System - PicoTR		
24	Description (技術・製品の内容)	PicoTherm’s “NanoTR” and “PicoTR” thermal analysis systems for thin films are the world’s first analyzers to provide high precision measurements of thermophysical properties of metallic, oxide, organic and other films. These analyzers enable rapid and highly precise measurements of thermal diffusivity, thermal effusivity, thermal conductivity and		

		interfacial thermal resistance for films, as thick as several 10s of μm and as thin as several 10s of nm, formed on any substrate.
25	Photos (写真等)	1. Thermal Analysis System - NanoTR Thermal Analysis System - PicoTR
26	Features (including innovation, superiority, difference) (技術・製品の特徴 (競合他社の類似商	1. Thermophysical Analysis of Thin Films, including Multilayer Structures NanoTR and PicoTR can measure the thermal diffusivity, thermal effusivity and conductivity of thin films and the interfacial thermal resistance between thin films of multi-layer films.

	品と比較した場合の優位性や革新性）)	2. High-speed Measurement NanoTR’ s state-of-the-art signal processing technology means high speed measurements. 3. RF and FF configuration NanoTR and PicoTR can be configured for both RF (rear heating / front detection) and FF (front heating / front detection) measurements, enabling measurement of a wide variety of samples. 4. Traceability to National Standards NanoTR / PicoTR ensure traceability to the National Standard in calibration process. RM1301-a（for NanoTR） Titanium Nitride Thin Film CRM5808-a（for PicoTR) Molybdenum Film
27	ISO or other certificates (免許、許認可、特許、ISO など)	1. CE marking 2. Japanese Industrial Standards (JIS) in ceramics were enacted in 2011. JIS R 1689 “Determination of thermal diffusivity of fine ceramic films by pulsed light heating thermoreflectance method” JIS R 1690 “Determination of interfacial thermal resistance between fine ceramic film and metal film”
Matching information		
28	Cooperation method (multiple choice) (マッチングニーズタイプ) (貴社のニーズタイプをお選びください。複数選択可。)	□Intellectual property right introduce (知的財産導入) □Looking for technology (技術を探す) □Looking for vendors (供給先を探す（仕入れたい）) □Looking for product as agent (代理販売する/ブランドを探す) □Export Intellectual property rights (知的財産輸出) □Technology transfer to Taiwan (技術を提供する（技術移転）) ☑Looking for buyer (提供先を探す（販売したい）) □Looking for agents (代理店を探す)

		□Looking for funding (資本調達) □Looking for R&D partnership (研究開発パートナーを探す) □Looking for investment target (投資先を探す) □Looking for funding (with share) (合資パートナーを探す) □ Others (その他)_____
29	Description for matching target (ニーズ具体的内容)	Looking for buyer related to the fields of - Phonon engineering - Semiconductor memories / ReRAM, PRAM - Power Devices - LEDs - Flat panel displays - Thermoelectric materials / Thermoelectric conversion elements - Phase-change thin films - Resin films - Magnetic thin films - Interlayer dielectric films / Low-k - Gate insulator films / High-k etc.
30	Description for matching means (希望アプローチ先)	☑materials(素材) ☑components(部品) ☑manufacturer (装置メーカー) ☑product user (製品ユーザー) □agents (代理店) ☑others (その他) _ (with company names that you would like to cooperate with, would be better; 具体的な企業名があればご教示ください)__ Taiwan Semiconductor Manufactory Company (TSMC)、台湾交通大学等 technology/equipment (技術/設備)_____
Information management		
31	Date of filling information (資料記入日)	2017 年 5 月 26 日

Taiwan-Japan Enterprises Cooperation Information (4/24)

No	Company information	
1	Company name (企業名)	（日本語）株式会社エム・アール・テクノロジー
		（英語） MRTechnology, Inc.
2	Address (所在地)	（日本語）茨城県つくば市千現 2-1-6
		（英語）TCI-B5, 2-1-6 Sengen, Tsukuba 305-0044 Ibaraki, JAPAN
3	Representative (代表者名)	（日本語）拝師智之
		（英語） Tomoyuki HAISHI, Ph.D
4	Industry field (産業分類)	貴社の産業分類をご記入してください： Magnetic Resonance Imaging, Bio science, measurement instruments.
5	Phone number (電話番号)	+81-29-859-5075
6	FAX	+81-3-5953-8878
7	E-Mail	haishi@mrtechnology.co.jp
8	Website	http://www.mrtechnology.co.jp/
9	Business description (事業内容)	Research and Development of compact Magnetic Resonance Imaging systems. Import/export business related to NMR/MRI equipment.
10	Product (主力商品)	Compact MRI
11	Established in (創業･設立)	1999 年 4 月
12	Personnel (従業員等数)	Management (役員): Formal & Contract (正社員・契約社員): Part time (パート等):
13	Domestic location (国内拠点)	Tsukuba-city
14	International location (海外拠点)	Albuquerque, NM, USA
15	Main distributor or partner in domestic (主要国内取引先または協力業者)	University, government and municipal offices, National Institutes, and etc.

16	International trading partner (主要海外取引先)	Not spscified		
Finance information				
17	Capital(資本金)			
		2014	2015	2016(forecast)
18	Sales revenue (売上高)			
19	Revenue (経常利益)			
20	Profit (当期利益)			
Contact information				
21	Supervisor (業務責任者)	Name：Tomoyuki HAISHI Division： Title：President&CEO		
		~~TEL：~~ ~~FAX：~~ ~~Mobile phone：~~		
		E-MAIL：haishi@mrtechnology.co.jp		
		~~Address：~~		
22	Contact person (連絡担当者)	Name：Tomoyuki HAISHI Division： Title：President&CEO		
		~~TEL：~~ ~~FAX：~~ ~~Mobile phone：~~		
		E-MAIL：haishi@mrtechnology.co.jp		
		~~Address：~~		
		Language you may use： （When communicate with Taiwan's entrepreneurs you may use） ☑ Japanese ☑ English ~~☐ Mandarin~~ ~~☐ Others：~~ _____		
Technology or product information				
23	Name (技術・製品の名称)	Magnetic Resonance Imaging System		
24	Description (技術・製品の内容)	Magnetic Resonance Imaging System		

25	Photos (写真等)	
26	Features (including innovation, superiority, difference) (技術・製品の特徴（競合他社の類似商品と比較した場合の優位性や革新性）)	Windows-based digital MRI systems.
27	ISO or other certificates (免許、許認可、特許、ISO など)	N.A.
Matching information		
28	Cooperation method (multiple choice) (マッチングニーズタイプ) (貴社のニーズタイプをお選びください。複数選択可。)	□Intellectual property right introduce (知的財産導入) ☑Looking for technology (技術を探す) ☑ Looking for vendors (供給先を探す（仕入れたい）) □Looking for product as agent (代理販売する/ブランドを探す) □Looking for funding (資本調達) □Export Intellectual property rights (知的財産輸出) ☑ Technology transfer to Taiwan (技術を提供する（技術移転）) ☑ Looking for buyer (提供先を探す（販売したい）) ☑Looking for agents (代理店を探す) □Looking for investment target (投資先を探す)

		☑Looking for R&D partnership (研究開発パートナーを探す) □Looking for funding (with share) (合資パートナーを探す) □ Others (その他)_____
29	Description for matching target (ニーズ具体的内容)	**We look for an application R&D partner of MRI related science.** **We look for company or institute who has technology of designing magnetic circuit for MRI.** **We look for a business partner who can organize business team with above specialties in Taiwan and MRTechnolgy in Japan.**
30	Description for matching means (希望アプローチ先)	□materials(素材) ☑components(部品) □☑manufacturer (装置メーカー) ☑product user (製品ユーザー) □☑gents (代理店) □others (その他) _ (with company names that you would like to cooperate with, would be better; 具体的な企業名があればご教示ください)_____ technology/equipment (技術/設備)_____
Information management		
31	Date of filling information (資料記入日)	2016 年 7 月 27 日

Taiwan-Japan Enterprises Cooperation Information (5/24)

No	Company information	
1	Company name (企業名)	（日本語）株式会社フジヒラ
		（英語）Fujihira Co., Ltd.
2	Address (所在地)	（日本語）茨城県つくば市千現２－１－６（つくば研究支援センターC-A-1）
		（英語）C-A-1 Tsukuba Center, 2-1-6 Sengen, Tsukuba, Ibaraki, 305-0047 Japan
3	Representative (代表者名)	（日本語）藤平　誠一
		（英語）Seiichi Fujihira
4	Industry field (産業分類)	貴社の産業分類をご記入してください： manufacturer
5	Phone number (電話番号)	+81-29-875-8401
6	FAX	
7	E-Mail	info2@fujihira-gr.co.jp
8	Website	http://www.fujihira-gr.co.jp/
9	Business description (事業内容)	development, production and marketing of superconducting and cryogenic equipment
10	Product (主力商品)	superconducting and cryogenic equipments: Cryostat,etc.
11	Established in (創業･設立)	1996 年 5 月
12	Personnel (従業員等数)	----
13	Domestic location (国内拠点)	C-A-1 Tsukuba Center, 2-1-6 Sengen, Tsukuba, Ibaraki, 305-0047 Japan
14	International location (海外拠点)	ＮＯ
15	Main distributor or partner in domestic (主要国内取引先または協力業者)	Public research institutes and universities National Institute for Materials Science(NIMS) Railway Technical Research Institute(RTRI)

16	International trading partner (主要海外取引先)	----		
Finance information				
17	Capital(資本金)	\50,0000,000-		
		2014	2015	2016(forecast)
18	Sales revenue (売上高)			
19	Revenue (経常利益)			
20	Profit (当期利益)			
Contact information				
21	Supervisor (業務責任者)	Name：Seiichi Fujihira Division： Title：		
		TEL：+81-29-875-8401 FAX： Mobile phone：		
		E-MAIL：info2@fujihira-gr.co.jp		
		Address：		
22	Contact person (連絡担当者)	Name：Hideyuki Fujihira Division： Title：		
		TEL：+81-29-875-8401 FAX： Mobile phone：		
		E-MAIL：info2@fujihira-gr.co.jp		
		Address：		
		Language you may use： （When communicate with Taiwan's entrepreneurs you may use） ☑ Japanese □ English □ Mandarin □ Others：_____		
Technology or product information				
23	Name (技術・製品の名称)	Superconducting and cryogenic equipment		
24	Description (技術・製品の内容)	Superconducting and cryogenic equipment		
25	Photos (写真等)	Photos of Cryostats		

26	Features (including innovation, superiority, difference) (技術・製品の特徴（競合他社の類似商品と比較した場合の優位性や革新性）)	Custom-made of cryogenic equipments including FRP Cryostats. Reasonable Price of custom-made cryogenic equipments. High performance of thermal insulation.
27	ISO or other certificates (免許、許認可、特許、ISO など)	
Matching information		

28	Cooperation method (multiple choice) (マッチングニーズタイプ) (貴社のニーズタイプをお選びください。複数選択可。)	□Intellectual property right introduce (知的財産導入) □Looking for technology (技術を探す) □Looking for vendors (供給先を探す（仕入れたい）） ☑Looking for product as agent (代理販売する/ブランドを探す) □Looking for funding (資本調達) ☑Looking for R&D partnership (研究開発パートナーを探す) □Export Intellectual property rights (知的財産輸出) □Technology transfer to Taiwan (技術を提供する（技術移転）） ☑Looking for buyer (提供先を探す（販売したい）） ☑Looking for agents (代理店を探す) □Looking for investment target (投資先を探す) □Looking for funding (with share) (合資パートナーを探す) □ Others (その他)_____
29	Description for matching target (ニーズ具体的内容)	Development of markets. Research institutes and universities.
30	Description for matching means (希望アプローチ先)	□materials(素材) □components(部品) □manufacturer (装置メーカー) ☑product user (製品ユーザー) ☑agents (代理店) □others (その他) _ (with company names that you would like to cooperate with, would be better; 具体的な企業名があればご教示ください)_____ technology/equipment (技術/設備)_____
Information management		
31	Date of filling information (資料記入日)	2016 年 7 月 23 日

Taiwan-Japan Enterprises Cooperation Information (6/24)

No	Company information	
1	Company name (企業名)	アプライド・ビジョン・システムズ
		Applied Vision Systems Corp.
2	Address (所在地)	茨城県つくば市梅園 2 - 7 - 3　つくばシティビル 403
		Tsukuba City Building 403, Umezono 2-7-3, Tsukuba city, Ibaraki, Japan
3	Representative (代表者名)	高橋　裕信
		Hironobu Takahashi
4	Industry field (産業分類)	Software service industry (Industry of commissioned development of software)
5	Phone number (電話番号)	+81-29-855-7652
6	FAX	+81-29-855-7659
7	E-Mail	avs-sales@avsc.jp
8	Website	http://avsc.jp
9	Business description (事業内容)	3D measurement system solution Image processing system solution
10	Product (主力商品)	Stereo Vision Technology GPS-image sensing solution
11	Established in (創業･設立)	2004 年 11 月
12	Personnel (従業員等数)	Management (役員): 4　Formal & Contract (正社員・契約社員):12 Part time (パート等): 0
13	Domestic location (国内拠点)	Tsukuba City
14	International location (海外拠点)	No location
15	Main distributor or partner in domestic	NTT Group, Seiko holdings, AIST,etc BeamSense(X-ray machine provided partner)
16	International trading partner	No

	(主要海外取引先)			
Finance information				
17	Capital(資本金)	\24,250,000		
		2014	2015	2016(forecast)
18	Sales revenue (売上高)	\278,838,717	\223,671,482	\(200,000,000)
19	Revenue (経常利益)	\33,083,714	\17,388,575	\(20,000,000)
20	Profit (当期利益)	\23,323,614	\13,944,029	\(15,000,000)
Contact information				
21	Supervisor (業務責任者)	Name：Hironobu Takahashi　Division： Title：President		
		TEL：029-855-7652　FAX：029-855-7659		
		E-MAIL：hironobu@avsc.jp		
		Address：Tsukuba City Building 403, Umezono 2-7-3, Tsukuba city		
22 (1)	Contact person (main) (連絡担当者)	Name：Hironobu Takahashi　Division： Title：President		
		TEL：029-855-7652　FAX：029-855-7659		
		E-MAIL：hironobu@avsc.jp		
		Address：Tsukuba City Building 403, Umezono 2-7-3, Tsukuba city		
		Language you may use： （When communicate with Taiwan's entrepreneurs you may use） ☑ Japanese　□ English　□ Mandarin　□ Others：_____		
22 (2)	Contact person (sub) (連絡担当者)	Name：Norihisa Okuma　Division：Operation Department Title：Chief		
		TEL：029-855-7652　FAX：029-855-7659		
		E-MAIL：okuma@avsc.jp		
		Address：Tsukuba City Building 403, Umezono 2-7-3, Tsukuba city		
		Language you may use： （When communicate with Taiwan's entrepreneurs you may use） ☑ Japanese　□ English　□ Mandarin　□ Others：_____		
Technology or product information				

23 (1)	Name (技術・製品の名称)	Technology of measurement system for mobile mapping.
24 (2)	Description (技術・製品の内容)	We have developed the technology of measurement and analysis system for mobile mapping.
25 (2)	Photos (写真等)	
26 (2)	Features (including innovation, superiority, difference) (技術・製品の特徴（競合他社の類似商品と比較した場合の優位性や革新性）)	3D measurement and analysis software which have highly precise calibration algorithm. This system can process a high-resolution camera and laser scanner. And We can provide a high-definition ortho image for drawing CAD data.
27 (2)	ISO or other certificates (免許、許認可、特許、ISO など)	
23 (2)	Name (技術・製品の名称)	Technology for plotting circuit pattern of multilayer board by X-ray stereo vision method

24 (2)	Description (技術・製品の内容)	To develop new X-ray machines which have multi capture devices to deal with a complicated pattern and detailed inspection. To develop highly precise calibration algorithm to enable relative 3D measurement of the 10μm image sensor position.
25 (2)	Photos (写真等)	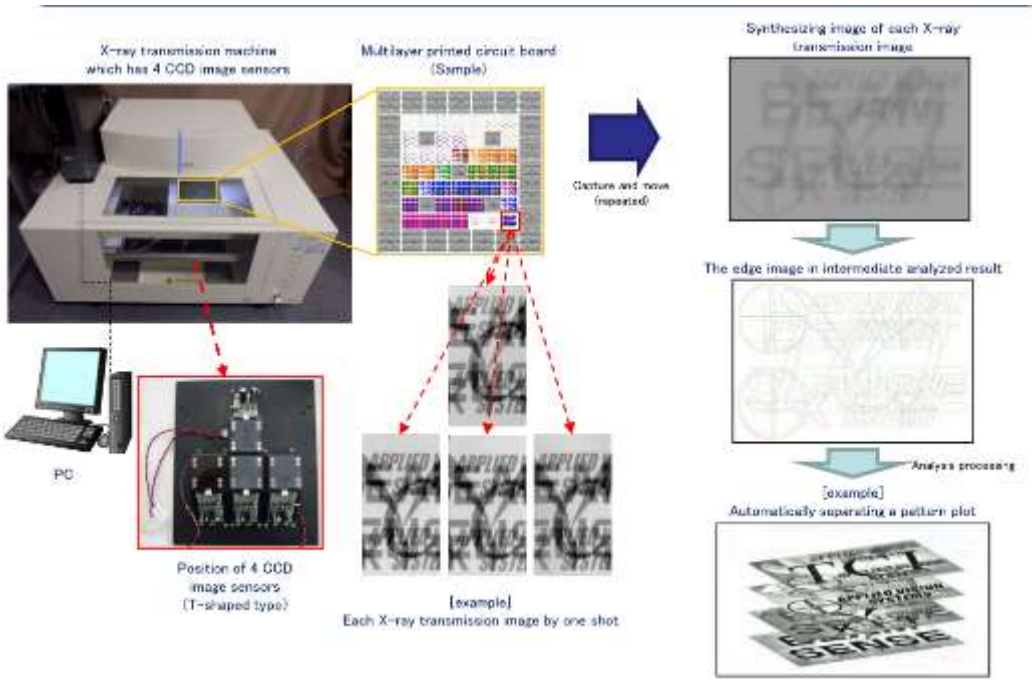
26 (2)	Features (including innovation, superiority, difference) (技術・製品の特徴（競合他社の類似商品と比較した場合の優位性や革新性）)	We have developed technology for separating a substrate and a semiconductor film from each other in multilayer printed circuit board by improving an X-ray radio scope machines and by utilizing a 3D measuring system of stereo vision method. Using this technology, a non-destructive inspection for a multilayer printed circuit pattern is possible in a manufacturing process.
27 (2)	ISO or other certificates (免許、許認可、特許、ISO など)	JAPAN PATENT: No 504454060
Matching information		

28	Cooperation method (multiple choice) (マッチングニーズタイプ) (貴社のニーズタイプをお選びください。複数選択可。)	□Intellectual property right introduce (知的財産導入) □Export Intellectual property rights (知的財産輸出) □Looking for technology (技術を探す) □Technology transfer to Taiwan (技術を提供する（技術移転）） ☑Looking for vendors (供給先を探す（仕入れたい）） □Looking for buyer (提供先を探す（販売したい）） □Looking for product as agent (代理販売する/ブランドを探す) □Looking for agents (代理店を探す) □Looking for funding (資本調達) □Looking for investment target (投資先を探す) ☑Looking for R&D partnership (研究開発パートナーを探す) □Looking for funding (with share) (合資パートナーを探す) □ Others (その他)_____
29	Description for matching target (ニーズ具体的内容)	Objectives of our overseas business include (1) the procurement of products relating to 3-dimensional visual sensing (especially, GPS and IMU module). and (2) the creation of customers for our products (especially, X-ray inspection system).
30	Description for matching means (希望アプローチ先)	□materials(素材) ☑components(部品) ☑manufacturer (装置メーカー) □product user (製品ユーザー) □agents (代理店) □others (その他) _ (with company names that you would like to cooperate with, would be better; 具体的な企業名があればご教示ください)_____ technology/equipment (技術/設備)_____
Information management		
31	Date of filling information (資料記入日)	2016 年 7 月 25 日

Taiwan-Japan Enterprises Cooperation Information (7/24)

No	Company information	
1	Company name (企業名)	（日本語）ペンギンシステム株式会社
		（英語）Penguin System Co.,Ltd.
2	Address (所在地)	（日本語）〒305-0047 茨城県つくば市千現 2-1-6 つくば研究支援センター CB10
		（英語）CB10, TCI, 2-1-6, Sengen, Tsukuba-city, Ibaraki-pref., Japan #305-0047
3	Representative (代表者名)	（日本語）仁衡　琢磨
		（英語）NIHIRA Takuma
4	Industry field (産業分類)	貴社の産業分類をご記入してください： Software development / Design, development and practical realization of various novel devices (Medical devices, general industrial devices…)
5	Phone number (電話番号)	+86-29-846-6671
6	FAX	+86-29-846-6672
7	E-Mail	taiwan@penguins.co.jp
8	Website	http://www.penguins.co.jp/en/
9	Business description (事業内容)	Development of tailor-made software designed to support researchers Development of software for medical use (Especially good at ion beam radiotherapy). Design, development and practical realization of various novel devices (Medical devices, general industrial devices…)
10	Product (主力商品)	Development of tailor-made software, medical software, software for health maintenance and management, industrial software including automation system; joint research/development: implementation of projects assigned by the government; and development of new equipment.
11	Established in (創業･設立)	March, 1983
12	Personnel	Management (役員): 3　Formal & Contract (正社員・契約社員): 20

	(従業員等数)	Part time (パート等): 1		
13	Domestic location (国内拠点)	Tsukuba Kobe		
14	International location (海外拠点)	None		
15	Main distributor or partner in domestic (主要国内取引先または協力業者)	National Institute of Advanced Industrial Science and Technology（AIST）, National Institute of Radiological Sciences, University of Gunma		
16	International trading partner (主要海外取引先)	None		
Finance information				
17	Capital(資本金)	25,000,000 JPY		
		2014	2015	2016(forecast)
18	Sales revenue (売上高)			
19	Revenue (経常利益)			
20	Profit (当期利益)			
Contact information				
21	Supervisor (業務責任者)	Name：NIHIRA Takuma　　Title：Managing Director		
		TEL：+81-29-846-6671　FAX：+81-29-846-6672 Mobile phone：+81-90-1404-3895		
		E-MAIL：taiwan@penguins.co.jp		
		Address：CB10,TCI,Sengen,Tsukuba-city,Ibaraki-pref.,#305-0047		
22	Contact person (連絡担当者)	Name：TAKAGI Daisuke　Division：Procution Promotion Devision Title：R&D Engineer		
		TEL：+81-29-846-671　FAX：+81-29-846-6672 Mobile phone：+81-90-1404-3895		
		E-MAIL：taiwan@penguins.co.jp		
		Address：CB10,TCI,Sengen,Tsukuba-city,Ibaraki-pref.,#305-0047		
		Language you may use： （When communicate with Taiwan's entrepreneurs you may use）		

		■ Japanese ■ English □ Mandarin □ Others : _____
Technology or product information		
23	Name (技術・製品の名称)	1. Radiotherapy software 1-1. The positioning system for ion beam radiotherapy. 1-2. Patient specific QA(Quality Assurance) management system 1-3. DICOM RT-Viewer (Customizable) 2. Medical equipment 2-1. Portable Syringe harmless equipment 2-2. And more equipment are now in development phase(We can' t introduce description in this year, but we can do it in next year)
24	Description (技術・製品の内容)	1. Radiotherapy software 1-1. The positioning system for ion beam radiotherapy. We have developed software for treatment sites which employ the highly advanced medical technology performed by the National Institute of Radiological Sciences(NIRS), headquartered in Chiba City, Japan and Gunma University in Gunma, Japan. We created software, used on-site, that helps doctors at the NIRS/Gunma University precisely administer treatments that utilize heavy-ion radiotherapy, a cancer-fighting technique developed by the institute. When it comes to administering radiation to patients, two of the most important factors for all techniques, including heavy ion radiotherapy, are "how much" to give and "where" on the patient it should be administered. The software developed at Penguin System helps doctors decide the "where" part of the equation. * Please confer the picture in No.24 Since the patient is never in the exact same position twice, doctors must constantly adjust where they aim the radiation. This is where our software steps in, rather than having the hospital staff manually adjust where the treatment is performed each time, a tedious and potentially error-prone process, the software we developed examines the patients x-rays and automatically corrects

		for any changes in the patient’ s posture or position. It does this by comparing the current x-rays with ones taken previously and measures both the horizontal and vertical changes. It then presents these changes to the medical team, allowing them to adjust the equipment accordingly. 1-2. Patient specific QA(Quality Assurance) management system Our system is a web system to do “Patient specific QA(Quality Assurance) management” workflow more easily. Our system can (1) Gamma analyzation automatically (2) Produce ledger sheets as PDF (3) Managing patient specific QA phase with web interface. 1-3. DICOM RT-Viewer (Customizable) Our DICOM RT-Viewer is our own product. If you want to use our viewer, you can order it. Or if you want to make your tailor-made RT-Viewing system, we can make it by customize our RT-Viewer. 2. Medical equipment 2-1. Portable Syringe harmless equipment Portable syringe melt/harmless system. It will cost less than 500W. It can be use in mountainous area, island, travelling clinic, and in disaster-stricken area in Taiwan, in Asia, and in all over the world. After melting, it can be treated as non sharp item. 2-2. And more equipment are now in development phase We can’ t introduce description in this year, but we can do it in next year.
25	Photos (写真等)	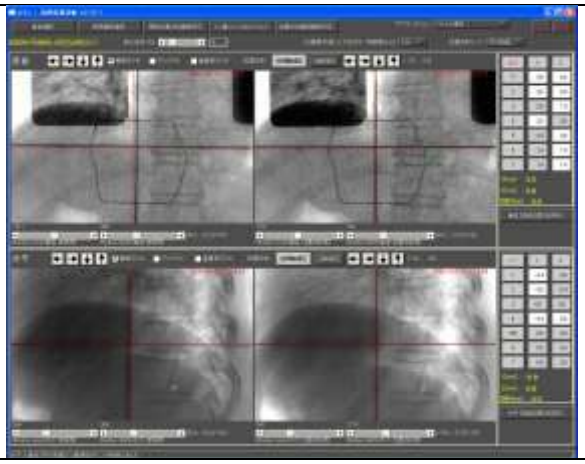 1-1. 1-2.

患者QA管理システム
Patient specific QA Management System
患者のワークフローをWebで一元管理！
実施対象をスピーディーに特定！ 実施の進捗も一目で判る！
作成が面倒だった帳票を自動生成！
QA測定結果解析（線量分布検証）を、Web画面からワンクリックで実施可能！
ブラウザから
全ての操作が可能！
測定結果と治療計画の
線量分布検証を自動実行！
解析処理の自動化！
ヒューマンエラーを抑制!!
解析時間を短縮！
治療患者数UPを実現!!
放射線医学総合研究所様向けに開発、
現在利用頂いています！
お客様の運用環境に合わせて
カスタマイズ可能です。
開発・販売元
PENGUIN SYSTEM
ペンギンシステム株式会社
E-mail: camerage@penguins.co.jp

1-3.

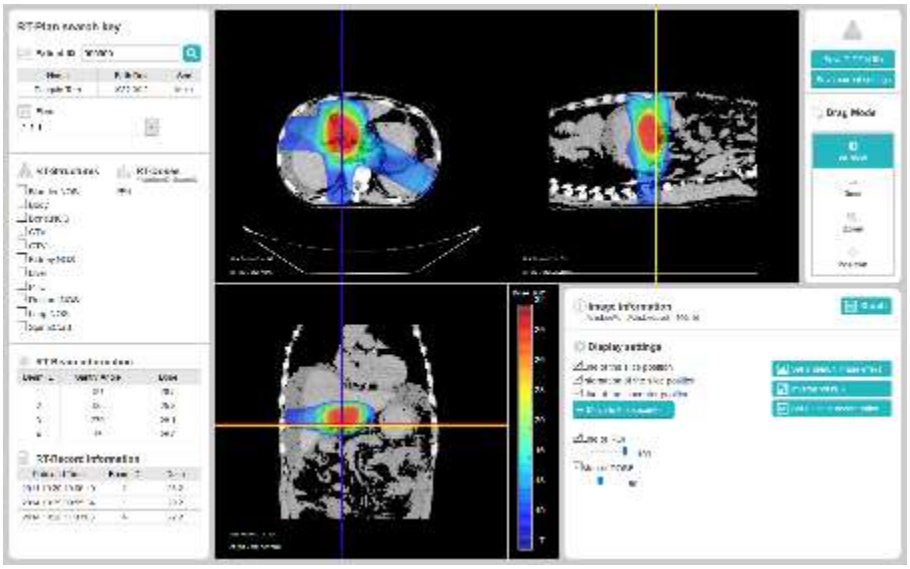

2-1.

		2-2. None (We can’ t show you in this year. We can show you in next year.)
26	Features (including innovation, superiority, difference) (技術・製品の特徴（競合他社の類似商品と比較した場合の優位性や革新性）)	1. Radiotherapy software 1-1. The positioning system for ion beam radiotherapy. Our software is for use at 2 important institute/hospital in 5 heavy-ion radiotherapy sites in Japan. It represents our superiority. 1-2. Patient specific QA(Quality Assurance) management system Our software is for use at 2 important institute/hospital in 5 heavy-ion radiotherapy sites in Japan. And now in consideration in other 2 sites in Japan. It represents our superiority. 1-3. DICOM RT-Viewer (Customizable) Our software had made with our know-how of ion beam radiotherapy software for over 13 years in high-end sites in Japan. And it can be use with Web interface. So, you can use in many scenes in hospital (in patient room, doctor, room etc.). 2. Medical equipment 2-1. Portable Syringe harmless equipment Other equipment can harmless only for needle of syringe. But our equipment can harmless not only needle but also syringe(Plastic part). 2-2. And more equipment are now in development phase We can’ t introduce description in this year, but we can do it in next year.
27	ISO or other certificates	Medical device manufacturer registration in Japan.
Matching information		
28	Cooperation method (multiple choice) (マッチングニーズタイプ) (貴社のニーズタイプをお選びください。複数選択可。)	□Intellectual property right introduce (知的財産導入) □Looking for technology (技術を探す) □Looking for vendors (供給先を探す（仕入れたい）) □Looking for product as agent (代理販売する/ブランドを探す) □Export Intellectual property rights (知的財産輸出) □Technology transfer to Taiwan (技術を提供する（技術移転）) ■Looking for buyer (提供先を探す（販売したい）) ■Looking for agents (代理店を探す)

		□Looking for funding (資本調達) □Looking for investment target (投資先を探す) □Looking for R&D partnership (研究開発パートナーを探す) □Looking for funding (with share) (合資パートナーを探す) □ Others (その他)_____
29	Description for matching target (ニーズ具体的内容)	1. Talk with 錫安生技股份有限公司 about the possibility to use our software or order a tailor-made software for their ion beam radiotherapy purpose or accelerator/detector purpose. 2. Talk with 馬偕病院 about he possibility to use our software or order a tailor-made software for their ion beam radiotherapy purpose. 3. We want search rep in Taiwan to sale our products to Taiwan, Asia, and the world. (We want the rep is especially strong at medical software/equipment and can correspond to medical legals.)
30	Description for matching means (希望アプローチ先)	□materials(素材) □components(部品) □manufacturer (装置メーカー) ■product user (製品ユーザー) ■agents (代理店) ■others (その他) _ (with company names that you would like to cooperate with, would be better; 具体的な企業名があればご教示ください)___錫安生技股份有限公司 、馬偕病院_____ technology/equipment (技術/設備)_____
Information management		
31	Date of filling information	4th, Aug, 2016

Taiwan-Japan Enterprises Cooperation Information (8/24)

No	Company information	
1	Company name (企業名)	（日本語） 株式会社 Doog
		（英語） Doog Inc.
2	Address (所在地)	（日本語） 茨城県つくば市吾妻３‾１８‾４
		（英語）18-4, Azuma 3-Chome, Tsukuba-shi, Ibaraki 305-0031 Japan
3	Representative (代表者名)	（日本語）大島　章
		（英語） Akira Oshima
4	Industry field (産業分類)	貴社の産業分類をご記入してください： Robot
5	Phone number (電話番号)	+81-29-869-9897
6	FAX	+81-29-869-9897
7	E-Mail	info@doog-inc.com
8	Website	http://doog-inc.com/
9	Business description (事業内容)	Planning, development, manufacture, and sale (including rental and lease) of accompanying robots Outsourced development of applications that utilize scanning laser range sensors Outsourced development of autonomous mobile robots
10	Product (主力商品)	Following Carry Robot ‘THOUZER’
11	Established in (創業･設立)	2012 年 11 月
12	Personnel (従業員等数)	----
13	Domestic location (国内拠点)	18-4, Azuma 3-Chome, Tsukuba-shi, Ibaraki 305-0031 Japan
14	International location (海外拠点)	----
15	Main distributor or partner in domestic (主要国内取引先または協力業者)	TANA-X,Inc. Matsuya-cho, Gojo-dori Karasuma-Higashi-iru, Shimogyo-ku, Kyoto-city, Kyoto

16	International trading partner (主要海外取引先)	-		
Finance information				
17	Capital(資本金)	Non-disclosure		
		2014	2015	2016(forecast)
18	Sales revenue (売上高)			
19	Revenue (経常利益)			
20	Profit (当期利益)			
Contact information				
21	Supervisor (業務責任者)	Name： Akira Oshima Title： CEO		
		TEL：+81-29-869-9897 FAX：+81-29-869-9897 Mobile phone：		
		E-MAIL：info@doog-inc.com		
		Address：A-1F,18-4, Azuma 3-Chome, Tsukuba-shi, Ibaraki 305-0031 Japan		
22	Contact person (連絡担当者)	Name：Hiroyasu Kuniyoshi Title：CTO		
		TEL： FAX： Mobile phone：+81-80-5063-0336		
		E-MAIL：hiroyasu.kuniyoshi@doog-inc.com		
		Address：A-1F,18-4, Azuma 3-Chome, Tsukuba-shi, Ibaraki 305-0031 Japan		
		Language you may use： （When communicate with Taiwan's entrepreneurs you may use） ☑ Japanese ☑ English ☑ Mandarin □ Others：_____		
Technology or product information				
23	Name (技術・製品の名称)	Following Carry Robot ‘THOUZER’		
24	Description (技術・製品の内容)	THOUZER is a target guided autonomous robot. Follows you and carrying things.		
25	Photos (写真等)			

26	Features (including innovation, superiority, difference) (技術・製品の特徴（競合他社の類似商品と比較した場合の優位性や革新性）)	Using a Laser sensor, THOUZER can identifies the target and follows the person. With Wide field of view, It can avoid obstacles safely.
27	ISO or other certificates (免許、許認可、特許、ISO など)	4 of Patents (PCT).
Matching information		
28	Cooperation method (multiple choice) (マッチングニーズタイプ) (貴社のニーズタイプをお選びください。複数選択可。)	□Intellectual property right introduce (知的財産導入) ☑Export Intellectual property rights (知的財産輸出) □Looking for technology (技術を探す) □Technology transfer to Taiwan (技術を提供する（技術移転）) ☑Looking for vendors (供給先を探す（仕入れたい）) □Looking for buyer (提供先を探す（販売したい）) □Looking for product as agent (代理販売する/ブランドを探す) □Looking for agents (代理店を探す) □Looking for funding (資本調達) □Looking for investment target (投資先を探す) □Looking for R&D partnership (研究開発パ □Looking for funding (with share) (合資パートナーを探す)

		ートナーを探す) □ Others (その他)_____
29	Description for matching target (ニーズ具体的内容)	**1, Procurement the parts and reduce the cost.** **2, Manufacturing in Taiwan.** **3, Sales Promotion in Taiwan.**
30	Description for matching means (希望アプローチ先)	□materials(素材) □components(部品) ☑ manufacturer (装置メーカー) □product user (製品ユーザー) ☑agents (代理店) ☑others (その他) _ (with company names that you would like to cooperate with, would be better; 具体的な企業名があればご教示ください)__ 国睦工業股份有限公司、台湾維順工業股份有限公司 technology/equipment (技術/設備)_____
Information management		
31	Date of filling information (資料記入日)	2016 年 7 月 27 日

Taiwan-Japan Enterprises Cooperation Information (9/24)

No	Company information	
1	Company name (企業名)	（日本語）株式会社ネクステッジテクノロジー
		（英語） nextEDGE Technology K.K.
2	Address (所在地)	（日本語）茨城県つくば市二の宮 1-13-4　シーズツクバ 2　302 号
		（英語）1-13-4 Ninomiya, SEEDS Tsukuba2 #302, Tsukuba, Ibaraki
3	Representative (代表者名)	（日本語） 坂本　堪亮
		（英語）　Taisuke Sakamoto
4	Industry field (産業分類)	貴社の産業分類をご記入してください： Information Technology (IT)
5	Phone number (電話番号)	029-858-1126
6	FAX	029-858-7510
7	E-Mail	contact@nextEDGEtech.com
8	Website	www.aeroTAP.net　　www.nextEDGEtech.com
9	Business description (事業内容)	Software engineering company Software Internationalization(“I18n”) and Localization (“L10n”) Developing touchless interface, “aeroTAP” 世界の優れたソフトウェアの日本語化、日本マーケットへの紹介 非接触 PC 操作を可能にするインタフェース aeroTAP 開発
10	Product (主力商品)	Software, IT 関連製品
11	Established in (創業･設立)	2003 年 3 月
12	Personnel (従業員等数)	Management (役員):2　Formal & Contract (正社員・契約社員):3 Part time (パート等):4
13	Domestic location (国内拠点)	Tsukuba, Ibaraki 茨城県つくば市
14	International location (海外拠点)	Washington State, USA
15	Main distributor or partner in domestic (主要国内取引先	Softbank C&S Co., Ltd　(ソフトバンク　コマース＆サービス株式会社) blue Co., Ltd　(株式会社ブルー)

	または協力業者)			
16	International trading partner (主要海外取引先)	Gotek Holding Co, Taiwan AV Software, Vietnam		
Finance information				
17	Capital(資本金)	JPY 10,000k		
(JPY)		2014	2015	2016(forecast)
18	Sales revenue (売上高)	37,997k	46,915k	66,500k
19	Revenue (経常利益)	3,692k	5,792k	6,600k
20	Profit (当期利益)	3,620k	5,720k	6,500k
Contact information				
21	Supervisor (業務責任者)	Name：Taisuke Sakamoto Title：Chairman		
		TEL：029-858-1126 FAX：029-858-7510 Mobile phone：		
		E-MAIL：contact@nextEDGEtech.com		
		Address：same as No.2		
22	Contact person (連絡担当者)	Name：Hiroko Sakamoto Division：Operations Title：		
		TEL：029-858-1126 FAX：029-858-7510 Mobile phone：		
		E-MAIL： hirokos@nextEDGEtech.com		
		Address：same as No.2		
		Language you may use： （When communicate with Taiwan's entrepreneurs you may use） ☑ Japanese ☑English ☐ Mandarin ☐ Others：_____		
Technology or product information				
23	Name (技術・製品の名称)	1. aeroTAP, touchless interface 2. aeroTAP 3D camera 1・ エアロタップ、タッチレスインタフェース 2・ エアロタップ専用 3D カメラ		
24	Description (技術・製品の内容)	With aeroTAP Touchless interface, you can interact with devices by displaying the palm of your hand toward the webcam. aeroTAP works with any existing application and it can be prepared by simply connecting a generic Web camera to a regular PC. aeroTAP allows users to interact with simple gestures without using mouse or		

		keyboard. aeroTAP enables maximize the function by connecting a dedicated “aeroTAP 3D Camera”. エアロタップは、キーボードやマウス、タッチスクリーンなどを使わず、離れた位置からコンピュータを操作するためのインタフェースシステムです。コンピュータを操作するためには、Web カメラを汎用の PC に接続するだけで、既存のアプリケーションを Web カメラに向かってシンプルなジェスチャを行うことで操作を可能にします。 また、当社開発の専用 aeroTAP 3D カメラを接続することで、その機能を最大限に引き出すことができます。
25	Photos (写真等)	operating aeroTAP 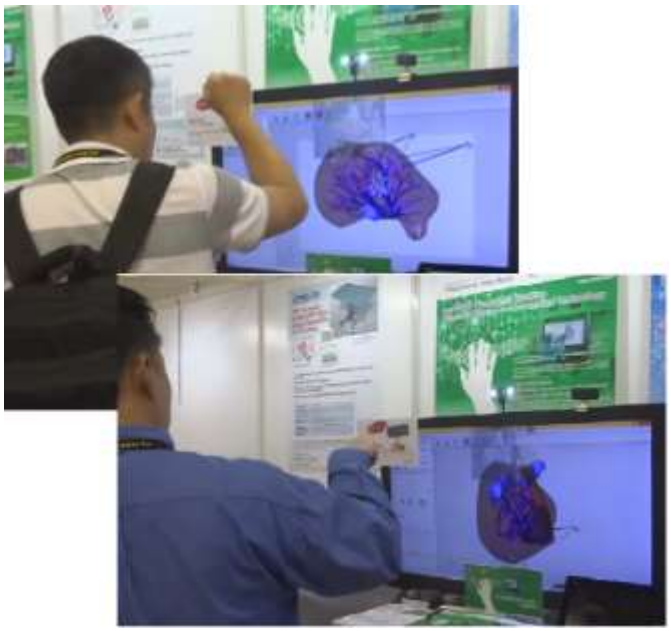 aeroTAP 3D camera

26	Features (including innovation, superiority, difference) (技術・製品の特徴（競合他社の類似商品と比較した場合の優位性や革新性）)	aeroTAP Touchless Interface Functionality: -No special application required -Able to use existing application. -Various devices selection will be available (Web camera, Infrared camera, Twin-lens camera, Kinect, Leap Motion etc.) -Minimizing CPU resource consumption Design that suppress unnecessary consumption of CPU, memory and resource. aeroTAP タッチレスインタフェースの特徴: ・アプリケーションの開発が不要。既存のアプリケーションをそのままタッチレス化 ・各種デバイスの選択が可能　（Web カメラ、赤外線カメラ、2 眼カメラ、Kinect, Leap Motion など) ・最小限の CPU リソース消費 CPU、メモリ リソースを不要に消費しない設計
27	ISO or other certificates (免許、許認可、特許、ISO など)	
Matching information		
28	Cooperation method (multiple choice) (マッチングニーズタイプ) (貴社のニーズタイプをお選びください。複数選択可。)	□Intellectual property right introduce (知的財産導入) □Export Intellectual property rights (知的財産輸出) □Looking for technology (技術を探す) □Technology transfer to Taiwan (技術を提供する（技術移転）) ☑Looking for vendors (供給先を探す（仕入れたい）) ☑Looking for buyer (提供先を探す（販売したい）) □Looking for product as agent (代理販売する/ブランドを探す) ☑Looking for agents (代理店を探す) □Looking for funding (資本調達) □Looking for investment target (投資先を探す)

		□Looking for R&D partnership (研究開発パートナーを探す) □Looking for funding (with share) (合資パートナーを探す) □ Others (その他)_____
29	Description for matching target (ニーズ具体的内容)	Looking for sales agents who can distribute our product 販売代理店契約先を探したい
30	Description for matching means (希望アプローチ先)	□materials(素材) □components(部品) ☑manufacturer (装置メーカー) □product user (製品ユーザー) ☑agents (代理店) □others (その他) _ (with company names that you would like to cooperate with, would be better; 具体的な企業名があればご教示ください)_____ technology/equipment (技術/設備)_____
Information management		
31	Date of filling information (資料記入日)	2016 年 7 月 20 日

Taiwan-Japan Enterprises Cooperation Information (10/24)

No	Company information			
1	Company name (企業名)	（日本語）株式会社　シロク		
		（英語）Xiroku Inc		
2	Address (所在地)	（日本語）茨城県つくば市千現 2-1-6		
		（英語）2-1-6, Sengen, Tsukuba, Ibaraki, 305-0047, Japan		
3	Representative (代表者名)	（日本語）小川　保二		
		（英語）Yasuji Ogawa		
4	Industry field (産業分類)	貴社の産業分類をご記入してください： Inffomation Technology		
5	Phone number (電話番号)	+81-29-849-5200		
6	FAX	+81-29-849-5201		
7	E-Mail			
8	Website	Http://www.xiroku.com		
9	Business description (事業内容)	Touch Screen、Cognitive function testing and training equipment		
10	Product (主力商品)	Touch Screen,　Pressure Sheet Sensor		
11	Established in (創業･設立)	2001 年 2 月		
12	Personnel (従業員等数)	----		
13	Domestic location(国内拠点)	2-1-6, Sengen, Tsukuba, Ibaraki, 305-0047, Japan 38,Shinko-cho, Hitachinaka, ibaraki, 312-0005. Japan		
14	Internationallocation (海外拠点)	Xiroku Taiwan Office		
15	Main distributor or partner in domestic (主要国内取引先または協力業者)	Hitachi, Panaspnic , Sharp , Ricoh		
16	International　trading partner (主要海外取引先)	Hite Vision(china), IQ board,(China), AHA Inc(Korea)		
Finance information				
17	Capital(資本金)	JP￥70,000,000		
		2014	2015	2016(forecast)
18	Sales revenue (売上高)			

19	Revenue (経常利益)			
20	Profit (当期利益)			
Contact information				
21	Supervisor (業務責任者)	Name：Sadayuki Takahashi　Division：Sales　Title：Manager		
		TEL：+81-29-849-5200FAX：+81-29-849-5201Mobile phone：		
		E-MAIL：takahashi@xiroku.com		
		Address：2-1-6, Sengen, Tsukuba, Ibaraki, 305-0047, Japan		
22	Contact person (連絡担当者)	Name：Sadayuki Takahashi　Division：Sales　Title：Manager		
		TEL：+81-29-849-5200 FAX：+81-29-849-5201Mobile phone：		
		E-MAIL：takahashi@xiroku.com		
		Address：2-1-6, Sengen, Tsukuba, Ibaraki, 305-0047, Japan		
		Language you may use： （When communicate with Taiwan's entrepreneurs you may use） ☑ Japanese　☐ English　☐Mandarin　☐ Others：		
Technology or product information				
23	Name (技術・製品の名称)	Peg Amore		
24	Description (技術・製品の内容)	Human cognitive function testing and training equipment		
25	Photos (写真等)			
26	Features (including innovation, superiority, difference) (技術・製品の特徴（競合他社の類似商品と比較した場合の優位性や革新性）)	Easy to test in 2 min It’s possible to test by one man 5 levels of evaluation result can be shown by numbers which is based on clinical study data of over 1000 pepole (Joint study with Tsukuba University) Cognitive function decline issue can be found in early stage and be improved (Already certified by joint rearch with Tsukuba University) 1000 人の臨床研究データに基づき５段階評価の数字で表示		

		（筑波大学と共同研究） 認知機能低下の早期発見および予防改善 （筑波大学と共同研究により検証済み）
27	ISO or other certificates (免許、許認可、特許、ISO など)	
Matching information		
28	Cooperation method (multiple choice) (マッチングニーズタイプ) (貴社のニーズタイプをお選びください。複数選択可。)	☐Intellectual property right introduce (知的財産導入) ☐Looking for technology (技術を探す) ☑Looking for vendors (供給先を探す（仕入れたい）) ☐Looking for product as agent (代理販売する/ブランドを探す) ☑Looking for funding (資本調達) ☑Looking for R&D partnership (研究開発パートナーを探す) ☐Export Intellectual property rights(知的財産輸出) ☑Technology transfer to Taiwan (技術を提供する（技術移転）) ☑Looking for buyer (提供先を探す（販売したい）) ☐Looking for agents (代理店を探す) ☐Looking for investment target (投資先を探す) ☐Looking for funding (with share) (合資パートナーを探す) ☐ Others (その他)_____
29	Description for matching target (ニーズ具体的内容)	Elderly care facility 老人介護施設 Hospital 病院 Health care euipment distributor ヘルスケアー販売会社 Labotory of medical school
30	Description for matching means (希望アプローチ先)	☐materials(素材) ☑components(部品) ☑manufacturer (装置メーカー) ☑product user (製品ユーザー) ☐agents (代理店) ☐others (その他)__(with company names that you would like to cooperate with, would be better; 具体的な企業名があればご教示ください) technology/equipment (技術/設備)_____
Information management		
31	Date of filling information (資料記入日)	2018 年 8 月 20 日

Taiwan-Japan Enterprises Cooperation Information (11/24)

No	Company information	
1	Company name (企業名)	（日本語）ADMIEXCO エンジン設計株式社
		（英語）ADMIEXCO Engine Design Corp.
2	Address (所在地)	（日本語）茨城県つくば市千現 2-1-6 創業プラザ 104
		（英語）2-1-6-104　Sengen, Tsukuba, Ibaraki 305-0047 JAPAN
3	Representative (代表者名)	（日本語）　宮内　正裕
		（英語）　Masahiro Miyauchi
4	Industry field (産業分類)	貴社の産業分類をご記入してください： Manufacture of general-purpose machinery(はん用機械器具製造業)
5	Phone number (電話番号)	+81-(0)29-879-5780
6	FAX	+81-(0)29-879-5784
7	E-Mail	Info@admiexco.com
8	Website	http://admiexco.com/
9	Business description (事業内容)	
10	Product (主力商品)	Stirling engine, biomass- burning cogeneration and plant waste heat recovery generator
11	Established in (創業･設立)	2014 年 3 月
12	Personnel (従業員等数)	----
13	Domestic location (国内拠点)	Tsukuba,Ibaraki
14	International location (海外拠点)	None
15	Main distributor or partner in domestic (主要国内取引先または協力業者)	Japaners agricultual corporations high-energy industry companies National Institute of Advanced Industrial and Technology(AIST) Institute of Industrial Science, The University of Tokyo
16	International trading partner	None

	(主要海外取引先)			
Finance information				
17	Capital(資本金)	9,000,000		
		2014	2015	2016(forecast)
18	Sales revenue (売上高)			
19	Revenue (経常利益)			
20	Profit (当期利益)			
Contact information				
21	Supervisor (業務責任者)	Name：Masahiro Miyauchi　Division：　Title：CEO		
		TEL：+81-(0)29-879-5780 FAX：+81-(0)29-879-5780 Mobile phone：+81-(0)90-8925-4224		
		E-MAIL：massa.miyauchi@admiexco.com		
		Address：2-1-6-104 Sengen, Tsukuba, Ibaraki 305-0047 JAPAN		
22	Contact person (連絡担当者)	Name：Eijiro Igari　Division：　Title：		
		TEL：+81-(0)29-879-5780　FAX：+81-(0)29-879-5784 Mobile phone：+81-(0)90-9323-4143		
		E-MAIL：eigari@admiexco.com		
		Address：2-1-6-104 Sengen, Tsukuba, Ibaraki 305-0047 JAPAN		
		Language you may use： （When communicate with Taiwan's entrepreneurs you may use） ☑ Japanese　☑ English　□ Mandarin　□ Others：_____		
Technology or product information				
23	Name (技術・製品の名称)	Stirling engine cogeneration		
24	Description (技術・製品の内容)	Stirling engine, biomass- burning cogeneration and plant waste heat recovery generator		
25	Photos (写真等)	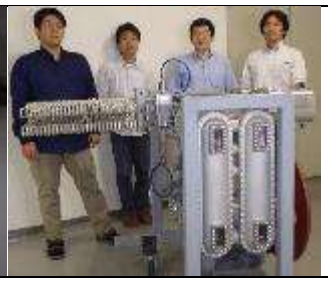		

26	Features (including innovation, superiority, difference) (技術・製品の特徴（競合他社の類似商品と比較した場合の優位性や革新性）)	排熱回収能力が高い・大型高性能熱交換器を備えたスターリングエンジン発電機. Stirling Engine power generator with large high performance heat exchanger.
27	ISO or other certificates (免許、許認可、特許、ISO など)	NONE
Matching information		
28	Cooperation method (multiple choice) (マッチングニーズタイプ) (貴社のニーズタイプをお選びください。複数選択可。)	□Intellectual property right introduce (知的財産導入) ☑Looking for technology (技術を探す) ☑Looking for vendors (供給先を探す（仕入れたい）) □Looking for product as agent (代理販売する/ブランドを探す) □Looking for funding (資本調達) ☑Looking for R&D partnership (研究開発パートナーを探す) □Export Intellectual property rights (知的財産輸出) □Technology transfer to Taiwan (技術を提供する（技術移転）) □Looking for buyer (提供先を探す（販売したい）) □Looking for agents (代理店を探す) □Looking for investment target (投資先を探す) □Looking for funding (with share) (合資パートナーを探す) □ Others (その他)_____

29	Description for matching target (ニーズ具体的内容)	
30	Description for matching means (希望アプローチ先)	□materials(素材) ☑components(部品) ☑manufacturer (装置メーカー) □product user (製品ユーザー) □agents (代理店) □others (その他) _ (with company names that you would like to cooperate with, would be better; 具体的な企業名があればご教示ください)_____ technology/equipment (技術/設備)_____
Information management		
31	Date of filling information (資料記入日)	2016 年 8 月 3 日

該編號之廠商資料不公開

Taiwan-Japan Enterprises Cooperation Questionnaire(13/24)

No	Company information	
1	Company name (企業名)	（日本語）炎重工株式会社
		（英語） Homura Heavy Industries Corporation
2	Address (所在地)	（日本語）岩手県滝沢市穴口 408-10
		（英語） 408-10 Anaguchi, Takizawa, Iwate, Japan.
3	Representative (代表者名)	（日本語）古澤 洋将
		（英語） Yosuke Furusawa
4	Industry field (産業分類)	- Industries (Field Robotics)
5	Phone number (電話番号)	+81-50-7117-5702
6	FAX	+81-19-618-7562
7	E-Mail	info@hmrc.co.jp
8	Website	https://www.hmrc.co.jp/
9	Business description (事業内容)	1) Product planning, R&D, manufacturing, support, and services. 2) Publishing (technical books and reports)
10	Product (主力商品)	Crawler Robot Developers kit (based on Gasoline Engine 125cc)
11	Established in (創業･設立)	February 25, 2016.
12	Personnel (従業員等数)	Management (役員): 1 Formal & Contract (正社員・契約社員): 2 Part time (パート等): 4
13	Domestic location (国内拠点)	Takizawa, Iwate, Japan.
14	International location (海外拠点)	Nothing
15	Main distributor or partner in domestic (主要国内取引先または協力業者)	

16	International trading partner (主要海外取引先)			
Finance information				
17	Capital(資本金)	Yen 34M		
		2015	2016	2017(forecast)
18	Sales revenue (売上高)			
19	Revenue (経常利益)			
20	Profit (当期利益)			
Contact information				
21	Supervisor (業務責任者)	Name： Yosuke Furusawa Division： Title：CEO		
		TEL : +81-50-7117-5702 FAX : +81-19-618-7562 Mobile : +81-80-2065-5716		
		E-MAIL：info@hmrc.co.jp		
		Address：408-10 Anaguchi, Takizawa, Iwate, Japan.		
22	Contact person (連絡担当者)	Name： Yosuke Furusawa Division： Title：CEO		
		TEL : +81-50-7117-5702 FAX : +81-19-618-7562 Mobile : +81-80-2065-5716		
		E-MAIL： info@hmrc.co.jp		
		Address：408-10 Anaguchi, Takizawa, Iwate, Japan.		
		Language you may use： （When communicate with Taiwan's entrepreneurs you may use） ■ Japanese □ English □ Mandarin □ Others：_____		
Technology or product information				
23	Name (技術・製品の名称)	Marine Drone		
24	Description (技術・製品の内容)	We are developing the small fishing boat-like robot for the aquacultural automation. We have already developed a land-based crawler robot for outdoor works, and we also have developed some multi-purpose and autonomous controllers to robotize various machines. The controllers can be adapted for various kinds of boats.		

25	Photos (写真等)	 Fig.1 Marine Drone. Fig.2 Multi-purpose Autonomous Controller.
26	Features (including innovation, superiority, difference) (技術・製品の特徴（競合他社の類似商品と比較した場合の優位性や革新性）)	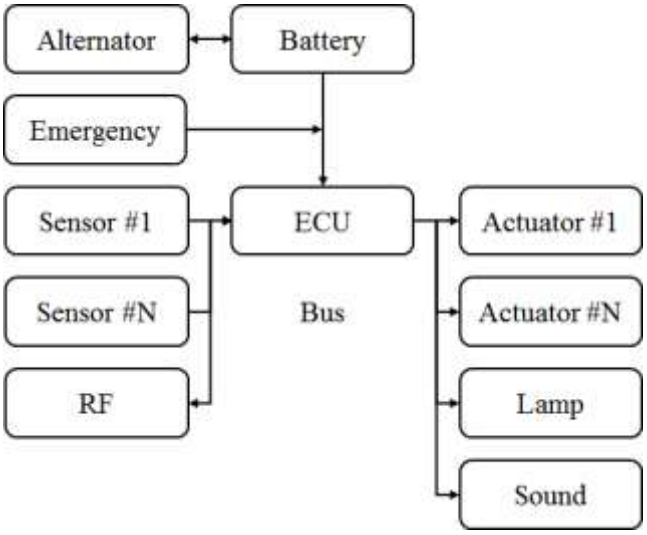 Fig.3 System Architecture.

		 Fig. 4 Based boat of Marine Drone. Fig.5 Crawler Robot.	
27	ISO or other certificates (免許、許認可、特許、ISO など)		
Matching information			
28	Cooperation method (multiple choice) (マッチングニーズタイプ) (貴社のニーズタイプをお選びくださ	□Intellectual property right introduce (知的財産導入) □Looking for technology (技術を探す) □Looking for vendors (供給先を探す（仕入れたい）） ■Looking for product as	□Export Intellectual property rights (知的財産輸出) □Technology transfer to Taiwan (技術を提供する（技術移転）） ■Looking for buyer (提供先を探す（販売したい）） ■Looking for agents (代理店を探

	い。複数選択可。)	agent (代理販売する/ブランドを探す) す) □Looking for funding (資本調達) □Looking for investment target (投資先を探す) □Looking for R&D partnership (研究開発パートナーを探す) □Looking for funding (with share) (合資パートナーを探す) □ Others (その他)_____
29	Description for matching target (ニーズ具体的内容)	We would like to promote drone ships that utilizes the multi-purpose and autonomous controllers to be adapted for other existing ships and machines. For example, they can be embedded in fishing boats or agricultural machines.
30	Description for matching means (希望アプローチ先)	□materials(素材) □components(部品) □manufacturer (装置メーカー) □product user (製品ユーザー) ■agents (代理店) □others (その他) _ (with company names that you would like to cooperate with, would be better; 具体的な企業名があればご教示ください)_____ technology/equipment (技術/設備)___Microprocessor IP _____
Information management		
31	Date of filling information (資料記入日)	Aug 5, 2017.

Taiwan-Japan Enterprises Cooperation Questionnaire(14/24)

No	Company information	
1	Company name (企業名)	（日本語）株式会社　ワープスペース
		（英語）　Warpspace Inc.
2	Address (所在地)	（日本語）茨城県つくば市吾妻 2-5-1-203
		（英語）　2-5-1-203 Azuma, Tsukuba Science City, Japan
3	Representative (代表者名)	（日本語）亀田　敏弘
		（英語）　Toshihiro KAMEDA
4	Industry field (産業分類)	- Electrical and mechanical equipment manufacturing
5	Phone number (電話番号)	+81-29-856-8128
6	FAX	+81-29-856-8128
7	E-Mail	toshihiro.kameda@warpspace.jp
8	Website	http://warpspace.jp
9	Business description (事業内容)	Provide various equipment and platform service to access space with Low-cost satellite systems
10	Product (主力商品)	Small Satellite Component, Portable earth station system
11	Established in (創業･設立)	2016 年　8 月
12	Personnel (従業員等数)	Management (役員): 3　Formal & Contract (正社員・契約社員): 2 Part time (パート等): 13
13	Domestic location (国内拠点)	Tsukuba Science City, Japan
14	International location (海外拠点)	N/A
15	Main distributor or partner in domestic (主要国内取引先または協力業者)	N/A
16	International trading partner	N/A

	(主要海外取引先)			
Finance information				
17	Capital(資本金)	Yen 2.15M		
		2015	2016	2017(forecast)
18	Sales revenue (売上高)	N/A	Yen 00M	Yen 10M
19	Revenue (経常利益)	N/A	Yen -1M	Yen 1M
20	Profit (当期利益)	N/A	Yen -1M	Yen 1M
Contact information				
21	Supervisor (業務責任者)	Name：Toshihiro KAMEDA Division：HQ Title：CEO		
		TEL：+81-29-856-8128 FAX：+81-29-856-8128 Mobile phone：+81-90-88043210		
		E-MAIL：toshihiro.kameda@warpspace.jp		
		Address：2-5-1-203 Azuma, Tsukuba Science City, Japan		
22	Contact person (連絡担当者)	Name：Toshihiro KAMEDA Division：HQ Title：CEO		
		TEL：+81-29-856-8128 FAX：+81-29-856-8128 Mobile phone：+81-90-88043210		
		E-MAIL：toshihiro.kameda@warpspace.jp		
		Address：2-5-1-203 Azuma, Tsukuba Science City, Japan		
		Language you may use： （When communicate with Taiwan's entrepreneurs you may use） ☑ Japanese ☑ English □ Mandarin □ Others：_____		
Technology or product information				
23	Name (技術・製品の名称)	- Transceiver module for small satellite - 3-Axis Reaction wheel for attitude control - Battery & Power supply module for small satellite - Complete CubeSat Kit - Portable satellite (or drone) tracking and control system		

24	Description (技術・製品の内容)	- Low-cost and small transceiver module for CubeSat class satellite - World smallest 3-axis reaction wheel for satellite (or drone) attitude control - All-in-one Li-Ion battery component with temperature control for space use - Low-cost and portable satellite (or drone) tracking and control with IoT technology
25	Photos (写真等)	 3-Axis Reaction Wheel for attitude control (30x30x30 mm) Portable satellite control station system with remote and automatic tracking Space environment Test facilities (vibration machine and LN cooling vacuum chamber 1U Cubesat flight model

26	Features (including innovation, superiority, difference) (技術・製品の特徴（競合他社の類似商品と比較した場合の優位性や革新性）)	- World smallest 3-axis reaction wheel for attitude control - low cost (1/2 – 1/5) compared with other small satellite module vender - Wireless and automatic satellite (or drone) tracking system - Customization ready various module with software control - Provide complete small satellite system from design to launch and mission control including mandatory space environment test support and downlink data management
27	ISO or other certificates (免許、許認可、特許、ISO など)	N/A
Matching information		
28	Cooperation method (multiple choice) (マッチングニーズタイプ) (貴社のニーズタイプをお選びください。複数選択可。)	☐Intellectual property right introduce (知的財産導入) ☑Looking for technology (技術を探す) ☑Looking for vendors (供給先を探す（仕入れたい）) ☐Looking for product as agent (代理販売する/ブランドを探す) ☐Looking for funding (資本調達) ☐Looking for R&D partnership (研究開発パートナーを探す) ☐Export Intellectual property rights (知的財産輸出) ☐Technology transfer to Taiwan (技術を提供する（技術移転）) ☑Looking for buyer (提供先を探す（販売したい）) ☑Looking for agents (代理店を探す) ☐Looking for investment target (投資先を探す) ☐Looking for funding (with share) (合資パートナーを探す) ☐ Others (その他)_____
29	Description for matching target (ニーズ具体的内容)	- Explore and expand market of CubeSat class small satellite in research and educational institute such as universities - Transceiver production above 10 GHz frequency - Low-cost mechanical parts and body assembly production for satellite tracking system

30	Description for matching means (希望アプローチ先)	☐materials(素材) ☑components(部品) ☑manufacturer (装置メーカー) ☑product user (製品ユーザー) ☑agents (代理店) ☐others (その他) _ (with company names that you would like to cooperate with, would be better; 具体的な企業名があればご教示ください)__ technology/equipment (技術/設備)___Microprocessor IP _____
Information management		
31	Date of filling information (資料記入日)	2018 年 8 月 16 日

從筑波研究學園都市內大學走新的創業公司的優勢及研究

作為創業公司，株式會社 Warp Space 于 2016 年 8 月 3 日從筑波大學間諜兼創業之旅。我們不僅擁有通過在筑波大學 6 年間于人工衛星的研究所學習的知識技術成績，此外，以共同研究活動的方式，可以方便快捷地使用筑波大學所擁有的各種實驗設備同樣是我們的優勢。而且，由于筑波研究學園都市的地理位置優勢，便于本公司與宇宙航空研究開發機構（JAXA）等研究開發機關之間的交流與合作。今後，對于公司的國際化成長，成田機場、羽田機場均在一小時交通圈內，同樣是不可忽視的優勢。

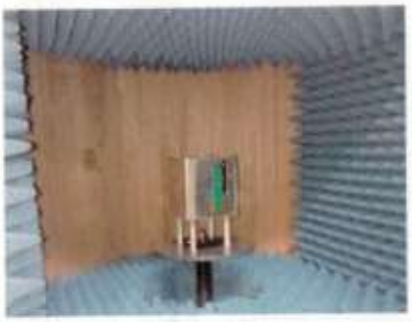

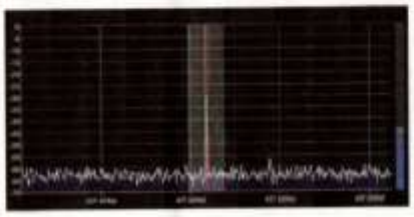

OUR MISSION

招聘信息

本公司誠招同樣以宇宙開發領域為目標的優秀人才。如對待遇薪資以及其他事項有任何疑問請隨時與我們聯繫。

株式会社 WARPSPACE
http://warpspace.jp

support@warpspace.jp
+81-29-856-8128

〒305-0005
茨城県つくば市天久保 3-21-9 Eastside Mine 210

Taiwan-Japan Enterprises Cooperation Questionnaire(15/24)

No	Company information	
1	Company name (企業名)	(日本語) 株式会社ナノルクス
		(英語) nanolux co, ltd.
2	Address (所在地)	(日本語) 茨城県つくば市千現二丁目 1 番地 6
		(英語) 2-1-6 Sengen, Tsukuba-shi, Ibaraki, Japan
3	Representative (代表者名)	(日本語) 祖父江 基史
		(英語) Motoshi SOBUE
4	Industry field (産業分類)	- Manufacturing industry
5	Phone number (電話番号)	+81-29-886-7115
6	FAX	+81-29-886-7116
7	E-Mail	sobue@nanolux.co.jp
8	Website	http://www.nanolux.co.jp/english/index.html
9	Business description (事業内容)	- Development, design, manufacture and sale of electronic equipment and electronic equipment systems such as night vision camera
10	Product (主力商品)	Color night vision camera
11	Established in (創業·設立)	2010 年 1 月
12	Personnel (従業員等数)	Management (役員): 2 Formal & Contract (正社員・契約社員): 4 Part time (パート等): 0
13	Domestic location (国内拠点)	HQ: 2-1-6 Sengen, Tsukuba-shi, Ibaraki, Japan
14	International location (海外拠点)	N/A
15	Main distributor or partner in domestic (主要国内取引先または協力業者)	National Institute of Advanced Industrial Science and Technology (AIST)

16	International trading partner (主要海外取引先)	ASUSTEK COMPUTER INC. (joint development from June, 2017)		
Finance information				
17	Capital(資本金)	Yen 67M (In process for the registration as of Jun. 9)		
		2015	2016	2017(forecast)
18	Sales revenue (売上高)	Yen -1M	Yen 4M	Yen 35M
19	Revenue (経常利益)	Yen -1M	Yen -3M	Yen -3M
20	Profit (当期利益)	Yen -1M	Yen -3M	Yen -3M
Contact information				
21	Supervisor (業務責任者)	Name：Motoshi Sobue　Division：PO　Title：CEO		
		TEL：+81-29-886-7115　FAX：　+81-29-886-7116 Mobile phone：+81-70-4017-4350		
		E-MAIL：sobue@nanolux.co.jp		
		Address：2-1-6 Sengen, Tsukuba-shi, Ibaraki, Japan		
22	Contact person (連絡担当者)	Name：Hitomi OGURA　Division：General Affairs Department Title：Chief Administrative Officer		
		TEL：+81-29-886-7115　FAX：　+81-29-886-7116 Mobile phone：+81-90-4665-2589		
		E-MAIL：　ogura@nanolux.co.jp		
		Address：2-1-6 Sengen, Tsukuba-shi, Ibaraki, Japan		
		Language you may use： （When communicate with Taiwan's entrepreneurs you may use） ■ Japanese　■ English　□ Mandarin　□ Others：_____		
Technology or product information				
23	Name (技術・製品の名称)	Color Night Vision by Infrared Illumination		

24	Description (技術・製品の内容)	- Whereas conventional night-vision cameras provide only monochromatic images, our new imaging technology gives us a great deal of visual information by color imaging on with IR. The color night-vision camera contributes greatly to safety and security driven by high performance on surveillance and the enriched monitor visibility. - Nanolux will develop, manufacture and sell an imaging sensor to enable color night vision technology. The color night-vision camera contributes greatly to safety and security driven by high performance on surveillance and the enriched monitor visibility. The applications will include security cameras, medical and nursing care cameras, assist cameras for vehicles, etc. Our competitive advantages is to have Registered international Patent：Image Capturing Device and Image Capturing Method. - As to self-driving area, Color is critical to understand signals and signs in the night. We’ ll be able to provide the technologies and to make improvement further enhance the safety of night driving.
25	Photos (写真等)	
26	Features (including innovation, superiority,	"Color night vision camera" has superiority in that it can shoot even in dark as compared with "Super high sensitivity cameras" which are competitive products, and can be manufactured at the same price as conventional cameras if mass-produced. Existing large companies are

	difference) (技術・製品の特徴（競合他社の類似商品と比較した場合の優位性や革新性）)	advertising that "super high sensitivity cameras" can shoot even nearly dark, but they cannot recognize objects again at night when the light of the city does not arrive. Also, since the ultrahigh sensitivity camera uses special mechanisms, expensive lenses and the like, the price is expensive, since frame accumulation is used, there is a disadvantage that it is vulnerable to moving images.
27	ISO or other certificates (免許、許認可、特許、ISO など)	1. Image capturing apparatus and image capturing method Patent No. 5874116 (Registration date: 2016.1.29) Inventor: Yasushi NAGAMUNE Applicant: AIST (50%), Nanolux (50%: Exclusive license) 画像撮影装置および画像撮影方法 特許第 5874116 号 （登録日:2016.1.29） 発明者：永宗　靖 出願人：産総研（50%）株式会社ナノルクス（50%：独占実施権） 2. Image capturing apparatus and image capturing method Patent No. 6010723 (Registration date: 2016.9.30) Inventor: Yasushi NAGAMUNE Applicant: AIST (50%), Nanolux (50%: Exclusive license) 画像撮影装置および画像撮影方法 特許第 6010723 号 （登録日:2016.9.30） 発明者： 永宗　靖 出願人：産総研（50%）株式会社ナノルクス（50%：独占実施権）
Matching information		
28	Cooperation method (multiple choice) (マッチングニーズタイプ) (貴社のニーズタイプをお選びください。複数選択可。)	□Intellectual property right introduce (知的財産導入) □Export Intellectual property rights (知的財産輸出) ■Looking for technology (技術を探す) □Technology transfer to Taiwan (技術を提供する（技術移転）) ■Looking for vendors (供給先を探す（仕入れたい）) ■Looking for buyer (提供先を探す（販売したい）) □Looking for product as agent (代理販売する/ブランドを探す) □Looking for agents (代理店を探す) □Looking for funding (資本調達) □Looking for investment target (投資先を探す)

		■Looking for R&D partnership (研究開発パートナーを探す) □Looking for funding (with share) (合資パートナーを探す) □ Others (その他)_____
29	Description for matching target (ニーズ具体的内容)	**(1) Realization of image sensor that can provide high quality and stable supply** **(2) Development of applied products that accurately grasp customer needs**
30	Description for matching means (希望アプローチ先)	■materials(素材) ■components(部品) ■manufacturer (装置メーカー) □product user (製品ユーザー) □agents (代理店) □others (その他) _ (with company names that you would like to cooperate with, would be better; 具体的な企業名があればご教示ください)_____ technology/equipment (技術/設備)___Microprocessor IP _____
Information management		
31	Date of filling information (資料記入日)	2017 年 6 月 9 日

Taiwan-Japan Enterprises Cooperation Questionnaire(16/24)

No	Company information	
1	Company name (企業名)	（日本語）サイトセンシング（株）
		（英語） Site Sensing Inc.
2	Address (所在地)	（日本語）東京都千代田区内神田 1-15-6
		（英語） 1-15-6, Uchikanda, Chiyoda-ku, Tokyo、Japan
3	Representative (代表者名)	（日本語）平林　隆
		（英語） Hirabayashi, Takashi
4	Industry field (産業分類)	Software Development
5	Phone number (電話番号)	+81-3-5577-3375
6	FAX	NA
7	E-Mail	Info@site-sensing.com
8	Website	http://site-sensing.com
9	Business description (事業内容)	Developing smaller wearable modules for indoor-&outdoor-positioning for pedestrians and vehicles.
10	Product (主力商品)	PDR-plus
11	Established in (創業･設立)	2012 年 6 月
12	Personnel (従業員等数)	Management (役員): 3 Formal & Contract (正社員・契約社員): 5 Part time (パート等): 1
13	Domestic location (国内拠点)	Tokyo, Japan
14	International location (海外拠点)	NA
15	Main distributor or partner in domestic (主要国内取引先または協力業者)	Shikino HiTech
16	International trading partner (主要海外取引先)	NA

Finance information				
17	Capital(資本金)	Yen 8M		
		2015	2016	2017(forecast)
18	Sales revenue (売上高)	Yen 00M	Yen 00M	Yen 00M
19	Revenue (経常利益)	Yen -00M	Yen -00M	Yen 00M
20	Profit (当期利益)	Yen -00M	Yen -00M	Yen 00M

Contact information		
21	Supervisor (業務責任者)	Name：T.Hirabayashi Division：Sales Title：Managing Director
		TEL :+81-3-5577-3375 FAX :NA Mobile phone :NA
		E-MAIL：t.hirabayashi@site-sensing.com
		Address：1-15-6 Uchikannda, Chiyoda-ku, Tokyo
22	Contact person (連絡担当者)	Name：The same as above Division： Title：
		TEL： FAX： Mobile phone：
		E-MAIL：
		Address：
		Language you may use： （When communicate with Taiwan's entrepreneurs you may use） ■ Japanese ■ English □ Mandarin □ Others：_____

Technology or product information		
23	Name (技術・製品の名称)	PDR-plus
24	Description (技術・製品の内容)	A small wearable module for indoor-&outdoor positioning for pedestrians and industry vehicles such as forklifts, carts and AGVs.
25	Photos (写真等)	NA
26	Features (including innovation, superiority, difference) (技術・製品の特徴（競合他社の類似商品と比較した場合の優位性や革新性）)	Specialized tech called Dead Reckoning(DR.) The combination of DR and GPS enables indoor-&outdoor-positioning. Also developed a consistent IoT system for positioning for the variety of industries on a global basis.

27	ISO or other certificates (免許、許認可、特許、ISO など)	NA
Matching information		
28	Cooperation method (multiple choice) (マッチングニーズタイプ) (貴社のニーズタイプをお選びください。複数選択可。)	□Intellectual property right introduce (知的財産導入) □Export Intellectual property rights (知的財産輸出) □Looking for technology (技術を探す) □Technology transfer to Taiwan (技術を提供する（技術移転）) ■Looking for vendors (供給先を探す（仕入れたい）) □Looking for buyer (提供先を探す（販売したい）) □Looking for product as agent (代理販売する/ブランドを探す) □Looking for agents (代理店を探す) □Looking for funding (資本調達) □Looking for investment target (投資先を探す) □Looking for R&D partnership (研究開発パートナーを探す) □Looking for funding (with share) (合資パートナーを探す) □ Others (その他)_____
29	Description for matching target (ニーズ具体的内容)	—
30	Description for matching means (希望アプローチ先)	□materials(素材) ■components(部品) □manufacturer (装置メーカー) □product user (製品ユーザー) □agents (代理店) □others (その他) _ (with company names that you would like to cooperate with, would be better; 具体的な企業名があればご教示ください)_____ technology/equipment (技術/設備)___Microprocessor IP _____
Information management		
31	Date of filling information (資料記入日)	2017 年 7 月 14 日

Taiwan-Japan Enterprises Cooperation Questionnaire(17/24)

No	Company information	
1	Company name (企業名)	（日本語）株式会社トリマティス
		（英語） Trimatiz.ltd
2	Address (所在地)	（日本語）千葉県市川市南八幡 4-7-12 ラ・パシフィック B801
		（英語） 801 LaPacifiqueB 4-7-12 Minamiyawata, Ichikawa, Chiba 272-0023 Japan
3	Representative (代表者名)	（日本語）島田 雄史
		（英語） Takeshi Shimada
4	Industry field (産業分類)	Electronics
5	Phone number (電話番号)	+81-47-379-4400
6	FAX	+81-47-370-0010
7	E-Mail	shiratori@trimatiz.com
8	Website	http://www.trimatiz.com/
9	Business description (事業内容)	Trimatiz is one of the most advanced companies developing high-speed and integrated devices to control the light at the sub-microsecond speed. Our devices are based on both high-speed analog and digital circuit technologies as well as high-speed optical technologies. We have been developing high-speed optical devices and helping other companies with our know-how and in-house facilities since 2004.
10	Product (主力商品)	High-speed VOA LD Driver Pulsed LD Driver Optical Fiber Amplifier Custom optical devices Custom electronic circuits
11	Established in (創業･設立)	2004 年 1 月
12	Personnel (従業員等数)	Management (役員): 4 Formal & Contract (正社員・契約社員): 14 Part time (パート等): 1
13	Domestic location	Chiba

	(国内拠点)			
14	International location (海外拠点)	N/A		
15	Main distributor or partner in domestic (主要国内取引先 または協力業者)	AIST(National Institute of Advanced Industrial Science and Technology), other domestic business companies, etc.		
16	International trading partner (主要海外取引先)	N/A		
Finance information				
17	Capital(資本金)			
		2015	2016	2017(forecast)
18	Sales revenue (売上高)			
19	Revenue (経常利益)			
20	Profit (当期利益)			
Contact information				
21	Supervisor (業務責任者)	Name：Yosuke Shiratori Title：Executive Officer		
		TEL： +81-47-379-4400		
		E-MAIL：shiratori@trimatiz.com		
		Address：801 LaPacifiqueB 4-7-12 Minamiyawata, Ichikawa, Chiba 272-0023 Japan		
22	Contact person (連絡担当者)	Name：Yosuke Shiratori Title：Executive Officer		
		TEL： +81-47-379-4400		
		E-MAIL：shiratori@trimatiz.com		
		Address：801 LaPacifiqueB 4-7-12 Minamiyawata, Ichikawa, Chiba 272-0023 Japan		
		Language you may use： （When communicate with Taiwan's entrepreneurs you may use） ■ Japanese ■ English □ Mandarin □ Others：_____		
Technology or product information				
23	Name (技術・製品の名称)	High-speed optical control & integration technology		

		1. High-speed optical technology 2. High-speed electronic technology <u>Assembly technologies for optical devices</u> Electro-optical devices Thermo-optical devices Liquid crystal devices Acousto-optial devices Optical wave guide devices Other passive devices, etc. <u>Circuits design for controlling optical devices</u> High-speed drive and feed-back control circuits for optical devices High-speed and high-voltage driver for MEMS devices Control and data communication circuits with micro-controllers Feedback controlled digital circuits with FPGAs Analog / digital mixed signal circuits TEC control circuits with pulse-width modulation drivers
24	Description (技術・製品の内容)	<u>High-Speed VOA</u> The voltage controlled high-speed VOA(variable optical attenuator) based on an electro-optic element offers high-speed performances as well as compact dimensions for easy integration or limited space environments. <u>Optical Fiber Amplifier</u> The bench top AGC(Automatic Gain Control) and ALC(Automatic Level Control) fiber amplifiers offer optical surge-free performances and are suitable for optical networking techniques such as optical packet switching or optical burst switching. <u>LD Drivers</u> Trimatiz’ s new Laser Diode(LD) driver board can deliver short pulse width (1 ns), large current (150A), and pulse-width adjustable features.

25	Photos (写真等)	 [High-speed VOA] [Optical Fiber Amplifier] [LD Drivers]
26	Features (including innovation, superiority, difference) (技術・製品の特徴 （競合他社の類似商品と比較した場合の優位性や革新性）)	Having unique characteristics and features, Trimatiz products are easily applicable for trend industries. 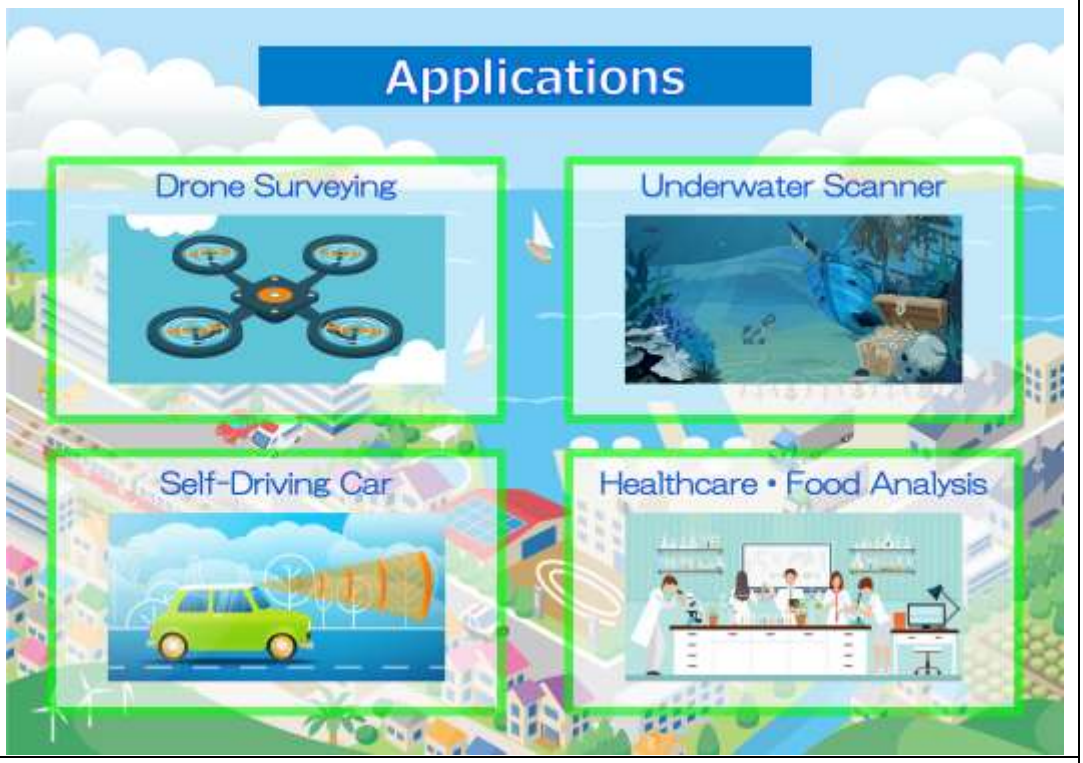
27	ISO or other	N/A

	certificates (免許、許認可、特許、ISO など)	
Matching information		
28	Cooperation method (multiple choice) (マッチングニーズタイプ) (貴社のニーズタイプをお選びください。複数選択可。)	□Intellectual property right introduce (知的財産導入) □Export Intellectual property rights (知的財産輸出) □Looking for technology (技術を探す) □Technology transfer to Taiwan (技術を提供する（技術移転）) □Looking for vendors (供給先を探す（仕入れたい）) ■Looking for buyer (提供先を探す（販売したい）) □Looking for product as agent (代理販売する/ブランドを探す) □Looking for agents (代理店を探す) □Looking for funding (資本調達) □Looking for investment target (投資先を探す) □Looking for R&D partnership (研究開発パートナーを探す) □Looking for funding (with share) (合資パートナーを探す) □ Others (その他)_____
29	Description for matching target (ニーズ具体的内容)	Looking for partners who can apply our technology and product for their finish products or R&D.
30	Description for matching means (希望アプローチ先)	□materials(素材) □components(部品) ■manufacturer (装置メーカー) □product user (製品ユーザー) □agents (代理店) □others (その他) _ (with company names that you would like to cooperate with, would be better; 具体的な企業名があればご教示ください)_____ technology/equipment (技術/設備)___Microprocessor IP _____
Information management		
31	Date of filling information (資料記入日)	2017 年 6 月 28 日

Taiwan-Japan Enterprises Cooperation Questionnaire(18/24)

No	Company information	
1	Company name (企業名)	（中国語）日本筑波科技株式会社
		（英語） Tsukuba Technology Co., Ltd
2	Address (所在地)	（中国語）日本国茨城县筑波市千现 1-14-11
		（英語） 1-14-11, Sengen, Tsukuba, Ibaraki, 3050047, JAPAN
3	Representative (代表者名)	（中国語）王 波
		（英語） WANG BO
4	Industry field (産業分類)	- 电器机械器具制造业
5	Phone number (電話番号)	+81-29-852-7777
6	FAX	+81-29-886-5528
7	E-Mail	info@tsukubatech.co.jp
8	Website	www.tsukubatech.co.jp
9	Business description (事業内容)	- （1） 激光超声波可视化检测仪的开发・制造・销售 - （2） 小型 X 射线检测仪的开发・制造・销售 - （3） 医疗设备的开发・制造 - （4） 小型超声波 C-Scan 检测仪的开发・制造・销售 - （5） 小型线量计的开发・制造・销售 - （6） 图像处理与图像检测设备的开发・制造・销售 - （7） 软件的开发・销售 - （8） 无损检测服务 - （9） 国际贸易、人文交流
10	Product（主力商品）	激光超声波可视化检测仪 小型 X 射线检测仪
11	Established in (創業･設立)	2005 年 7 月
12	Personnel (従業員等数)	Management（役員）: 5 Formal & Contract（正社員・契約社員）: 15 Part time（パート等）: 3
13	Domestic location (国内拠点)	日本国茨城县筑波市千现 1-14-11 日本国东京都港区新桥 1-18-21 第一日比谷大厦 5 楼
14	International location (海外拠点)	西安筑波科技有限公司 香港築波科技有限公司
15	Main distributor or partner in domestic（主要国内取引先 または協力業者）	株式会社 IHI 株式会社日立制作所 JFE 钢铁株式会社 新日铁住金株式会社 富士重工业株式会社 本田技研工业株式会社 东芝株式会社 中部电力株式会社 国立研究开发法人产业技术综合研究所 国立研究开发法人物质・材料研究机构 东京大学

16	International trading partner (主要海外取引先)	中国西安交通大学　　中国郑州大学 中国西安石油大学		
Finance information				
17	Capital(資本金)	20,000,000 日元		
		2016	2017	2018(forecast)
18	Sales revenue (売上高)	147,800,000	143,000,000	240,000,000
19	Revenue (経常利益)	-5,900,000	12,600,000	4,000,000
20	Profit (当期利益)	-5,760,000	800,000	2,700,000
Contact information				
21	Supervisor (業務責任者)	Name：张　波　　Division：　销售　　Title：经理		
		TEL　:+81-29-852-7777　　FAX　:　+81-29-886-5528 Mobile phone　:+81-90-9839-0572		
		E-MAIL：zhangbo@tsukubatech.co.jp		
		Address：日本国茨城县筑波市千现 1-14-11		
22	Contact person (連絡担当者)	Name：张　波　　Division：　销售　　Title：经理		
		TEL　:　+81-29-852-7777　　FAX　:　+81-29-886-5528 Mobile phone　: +81-90-9839-0572		
		E-MAIL：　zhangbo@tsukubatech.co.jp		
		Address：日本国茨城县筑波市千现 1-14-11		
		Language you may use： （When communicate with Taiwan's entrepreneurs you may use） ☑ Japanese　☐ English　☐ Mandarin　☑ Others：　中文		
Technology or product information				
23	Name (技術・製品の名称)	1.激光超声波可视化检测仪 2.小型 X 射线检测仪		
24	Description (技術・製品の内容)	1.激光超声波可视化检测仪 激光超声波可视化检测仪是利用脉冲激光对被检测物体表面扫描所产生的超声波图像来检查物体内部的异常及缺陷的无损检测仪器。当激光照射到物体表面时因瞬间局部热膨胀而产生超声波并在物体内部传播，当超声波传播到异常部位或缺陷部位时会反射并传输到物体表面被观察到。该仪器能动态地观察到超声波的实际传播过程，从而可直观地检测出物体内部的异常或缺陷。此外，该仪器具有丰富的图像处理及信号处理功能，可对物体的缺陷进行分析与评价。 2.小型 X 射线检测仪 小型 X 线检测仪采用了世界领先的针叶树型碳纳米构造技术的冷阴极 X 射线管。设备无需预热，使用普通电池就能够产生 150keV 的 X 射线。与以往的热阴极 X 射线设备相同，可以用在无损检测或医疗等行业，由于无需预热，因此可以瞬间拍照。此设备寿命长、体积小、重量轻、省电、操作简单、可随身携带。		
25	Photos (写真等)	1.激光超声波可视化检测仪		

		 超小型激光超声波可视化检测仪　完全非接触式激光超声波可视化检测仪　便携式激光超声波可视化检测仪 2.小型 X 射线检测仪 超小型X射线检测仪（60kV）　小型X射线检测仪（150kV）　无线小型X射线检测仪（130kV） 办公室用小型X射线检测仪　多管X射线断层合成（DTS）检测仪　高压输电线自走式X射线检测仪
26	Features (including innovation, superiority, difference) (技術・製品の特徴（競合他社の類似商品と比較した場合の優位性や革新性）)	1.激光超声波可视化检测仪 与以往的超声波检测仪相比，激光超声波可视化检测仪有以下特点： ①采用了非接触的激光扫描方式，对曲面、非连续及狭小等复杂形状部位均能实现可视化检测。 ②采用了激光和电动小镜组合的非接触扫描方式，可实现高速、大范围的可视化检测。 该产品可用于金属、陶瓷、树脂、碳纤维复合材料检测；可检测出其裂纹、腐蚀、气孔、层间脱离等缺陷；可应用于石油、化工、天然气以及发电设备的管道损伤检查；可用于零部件内部缺陷、焊接部缺陷、复合材料损伤等检查。也可用于波动传播的机理研究、超声波探头的性能评价、建筑物安全性评价、材料评价等方面。 2.小型 X 射线检测仪 小型 X 射线检测仪有以下特点： ①小型轻便、无需预热、拍片方便，因此可以迅速进行可视化检测工作。 ②即使是没有专业知识的人也可轻松进行 X 射线检测。 由于使用了世界领先的碳纳米构造技术的冷阴极 X 射线管，使射线管阴极寿命得以大幅度延长，从而确保了 X 射线源的长寿命化。同时，碳纳米构造技术可以保证冷阴极产生较多的电子从而确保相应的 X 射线发射量。

27	ISO or other certificates (免許、許認可、特許、ISO など)	1. 特许第 5967637 号　医療用小型Ｘ線撮影装置 （日本） 2. 特许第 6281119 号　ポータブル 3D 表示Ｘ線撮影装置（日本） 3. 特许第 5201515 号　X 線非破壊検査装置（日本） 4. 特许第 6108490 号　ポータブル電線端部 X 線検査装置（日本）
Matching information		
28	Cooperation method (multiple choice) (マッチングニーズタイプ) (貴社のニーズタイプをお選びください。複数選択可。)	☐Intellectual property right introduce (知的財産導入) ☐Looking for technology (技術を探す) ☐Looking for vendors (供給先を探す（仕入れたい）) ☐Looking for product as agent (代理販売する/ブランドを探す) ☐☑Looking for funding (資本調達) ☐Looking for R&D partnership (研究開発パートナーを探す) ☐ Others (その他)_____ ☐Export Intellectual property rights (知的財産輸出) ☐Technology transfer to Taiwan (技術を提供する（技術移転）) ☑Looking for buyer (提供先を探す（販売したい）) ☑Looking for agents (代理店を探す) ☐Looking for investment target (投資先を探す) ☑Looking for funding (with share) (合資パートナーを探す)
29	Description for matching target (ニーズ具体的内容)	
30	Description for matching means (希望アプローチ先)	☐materials(素材) ☐components(部品) ☐manufacturer (装置メーカー) ☑product user (製品ユーザー) ☑agents (代理店) ☐others (その他)__(with company names that you would like to cooperate with, would be better; 具体的な企業名があればご教示ください)_____ technology/equipment (技術/設備)___Microprocessor IP _____
Information management		
31	Date of filling information (資料記入日)	2018 年 8 月 22 日

Taiwan-Japan Enterprises Cooperation Questionnaire(19/24)

1	Company name (企業名)	（日本語）株式会社スワローインキュベート
		（英語）Swallow Incubate Co., Ltd.
2	Address (所在地)	（日本語）茨城県つくば市千現 2-1-6　C-B-5
		（英語）　C-B-5, Sengen2-1-6, Tsukuba-shi, Ibaraki
3	Representative (代表者名)	（日本語）大野　寿和
		（英語）　Toshikazu Ohno
4	Industry field (産業分類)	- 情報サービス業
5	Phone number (電話番号)	+81-29-886-9912
6	FAX	+81-29-886-9913
7	E-Mail	info@swallow-incubate.com
8	Website	https://swallow-incubate.com
9	Business description (事業内容)	- 虹彩認証技術の研究開発・販売 - 音声による感情認識技術の研究開発・販売 - 行き先提案技術の研究開発・販売
10	Product(主力商品)	虹彩認証技術ＳＤＫ
11	Established in (創業･設立)	2013 年　12 月
12	Personnel (従業員等数)	Management(役員): 2　Formal& Contract(正社員・契約社員): 5 Part time(パート等): 4
13	Domestic location(国内拠点)	茨城県つくば市
14	Internationallocation (海外拠点)	なし
15	Main distributor or partnerin domestic (主要国内取引先 または協力業者)	パナソニック株式会社
16	International trading partner (主要海外取引先)	

Finance information				
17	Capital(資本金)	Yen 5M		
		2015	2016	2017(forecast)
18	Sales revenue (売上高)	Yen 00M	Yen 00M	Yen 00M
19	Revenue (経常利益)	Yen -00M	Yen -00M	Yen 00M
20	Profit(当期利益)	Yen -00M	Yen -00M	Yen 00M
Contact information				
21	Supervisor (業務責任者)	Name：Toshikazu Ohno Division： Title： President		
		TEL :81-29-886-9912 FAX :81-29-886-9913 Mobile phone :		
		E-MAIL：ohno@swallow-incubate.com		
		Address：C-B-5, Sengen2-1-6, Tsukuba-shi, Ibaraki		
22	Contact person (連絡担当者)	Name： Division： Title：		
		TEL： FAX： Mobile phone：		
		E-MAIL：		
		Address：		
		Language you may use： （When communicate with Taiwan's entrepreneurs you may use） ■Japanese □English □ Mandarin □ Others：_____		
Technology or product information				
23	Name (技術・製品の名称)	虹彩認証技術 SDK		
24	Description (技術・製品の内容)	- アクセス管理技術の一つである生体認証は、ほかの物理認証や ID パスワード認証と違い、盗難・紛失・偽造のリスクが低く、今後ますます市場が広がる技術となっています。 - 当社は、生体認証技術の中でもタッチレスで認証可能な「虹彩認証技術」のソフトウェアエンジンの研究開発を行っています。これまで海外の既存エンジンを流用するのが虹彩認証技術の主流でしたが、国産として自社開発を行い、パナソニック社の特許をとりいれることで精度向上・参入障壁の構築を実施しました。屋外での認証も可能です。		

25	Photos (写真等)	
26	Features (including innovation, superiority, difference) (技術・製品の特徴(競合他社の類似商品と比較した場合の優位性や革新性))	- **当社のエンジンでは、接眼タイプ、30cm**からの認証、１．５ｍからの認証の３タイプのエンジンがあります。接眼タイプでは、ＶＲのヘッドマウントディスプレイや、決済などでご利用いただくことができます。 - ３０ｃｍからの認証では、ＰＣやスマホ、銀行ＡＴＭ、自動車のキーの代替などにご利用いただくことが可能です。 - １．５ｍからの認証では、ウォークスルー認証を行うことができますので、入退室管理や入管ゲート、入場管理などの主体的でない認証においてご利用いただくことができます。
27	ISO or other certificates (免許、許認可、特許、ISO など)	なし
Matching information		

28	Cooperation method (multiple choice) (マッチングニーズタイプ) (貴社のニーズタイプをお選びください。複数選択可。)	□Intellectual property right introduce(知的財産導入) □Export Intellectual property rights(知的財産輸出) □Looking for technology(技術を探す) □Technology transfer to Taiwan(技術を提供する（技術移転）） □Looking for vendors (供給先を探す（仕入れたい）） ■Looking for buyer(提供先を探す（販売したい）） □Looking for product as agent (代理販売する/ブランドを探す) □Looking for agents(代理店を探す) □Looking for funding(資本調達) □Looking for investment target (投資先を探す) ■Looking for R&D partnership(研究開発パートナーを探す) □Looking for funding (with share) (合資パートナーを探す) □ Others (その他)_____
29	Description for matching target (ニーズ具体的内容)	虹彩認証技術は大きくわけて、虹彩画像の撮影と虹彩画像の認証の2つのフェーズがあります。前者はハードウエア、後者はソフトウェアにて行うものですが、当社はソフトウェア開発企業であるためハードウェアの開発・量産ができないため、共同開発を実施していただける企業様を求めています。量産のみならず試作品の開発も廉価にスピーディーにご対応いただける企業を探しています。
30	Description for matching means (希望アプローチ先)	□materials(素材)□components(部品)■manufacturer(装置メーカー) □product user(製品ユーザー)□agents (代理店) □others(その他) _ (with company names that you would like to cooperate with, would be better; 具体的な企業名があればご教示ください)_____ technology/equipment (技術/設備)___Microprocessor IP _____
Information management		
31	Date of filling information (資料記入日)	2017 年 11 月　09 日

該編號之廠商資料不公開

Taiwan-Japan Enterprises Cooperation Questionnaire(21/24)

No	Company information	
1	Company name (企業名)	（日本語）株式会社 Next ｺﾛｲﾄﾞ分散凝集技術研究所
		（英語）Next Colloid Dispersion Cohesion Institute of Technology Co.,LTD
2	Address (所在地)	（日本語）305-0047 茨城県つくば市千現 2-1-6　D-12
		（英語）D-12,2-1-6 Sengen, Tsukuba, ibaraki 305-0047 JAPAN
3	Representative (代表者名)	（日本語）来住野　敦
		（英語）　ATSUSHI KISUNO
4	Industry field (産業分類)	R&D
5	Phone number (電話番号)	+81-29-879-7815
6	FAX	+81-29-879-7814
7	E-Mail	a.kisuno@nextcdc.co.jp
8	Website	www.nextcdc.co.jp
9	Business description (事業内容)	Current Issues; Need to develop the metal-semiconductor separation of CNT. Enlargement of Seebeck coefficient. Establish a production method. Needs; More power generation for different applications. World Wide Battery Market – Growing rapidly.
10	Product (主力商品)	Dispersion of carbon nanotubes
11	Established in (創業·設立)	2014 年　9 月
12	Personnel (従業員等数)	Management (役員):2　Formal & Contract (正社員・契約社員): 0 Part time (パート等):0
13	Domestic location (国内拠点)	ibaraki
14	International location (海外拠点)	
15	Main distributor or partner in	ZEON、oak-trees, Inc.

	domestic (主要国内取引先または協力業者)			
16	International trading partner (主要海外取引先)			
Finance information				
17	Capital(資本金)	Yen 990M		
		2016	2017	2018(forecast)
18	Sales revenue (売上高)	Yen 00M	Yen 00M	Yen 00M
19	Revenue (経常利益)	Yen -00M	Yen -00M	Yen 00M
20	Profit (当期利益)	Yen -00M	Yen -00M	Yen 00M
Contact information				
21	Supervisor (業務責任者)	Name：ATSUSHI KISUNO Division：Representative Director and President Title：		
		TEL :029-879-7815 FAX :029-879-7814 Mobile phone :		
		E-MAIL：a.kisuno@nextcdc.co.jp		
		Address：D-12,2-1-6 Sengen, Tsukuba, ibaraki 305-0047 JAPAN		
22	Contact person (連絡担当者)	Name：ATSUSHI KISUNO Division：Representative Director and President Title：		
		TEL :029-879-7815 FAX :029-879-7814 Mobile phone :		
		E-MAIL：a.kisuno@nextcdc.co.jp		
		Address：D-12,2-1-6 Sengen, Tsukuba, ibaraki 305-0047 JAPAN		
		Language you may use：Japanese （When communicate with Taiwan's entrepreneurs you may use） ■ Japanese □ English □ Mandarin □ Others：_____		
Technology or product information				
23	Name (技術・製品の名称)	Basic three conditions are studying at Next Colloid. Easy to get high-carbon-purity SWCNT (Patent Pending). Establish the selective separation method of semiconductor type SWCNT. Alignment is controlled by Next Colloid' s technology (Patent		

		Pending).
24	Description (技術・製品の内容)	- In order to take advantage of CNT, an application manufacturer wants pure Carbon NT. However, currently available CNT still contains unwanted residue. - Next Colloid has already developed how to eliminate those unwanted substances by utilizing Biryu device（Patent Pending）.
25	Photos (写真等)	 0.7WT%単層ＣＮＴ水分散液
26	Features (including innovation, superiority, difference) (技術・製品の特徴（競合他社の類似商品と比較した場合の優位性や革新性）)	Basic three conditions are studying at Next Colloid. Easy to get high-carbon-purity SWCNT (Patent Pending). Establish the selective separation method of semiconductor type SWCNT. Alignment is controlled by Next Colloid' s technology (Patent Pending).
27	ISO or other certificates (免許、許認可、特許、ISO など)	Japanese Patent Application No. 2015-172807 Japanese Patent Application Laid-open No. 2017-048085 2015/09/02 2017/03/09 - Collection method of semiconductor type carbon nanotube Corporation Next Colloidal dispersion aggregation technology laboratory C01B31 / 02, 101 @ F C01 B32 / 152

		Japanese Patent Application No. 2016-024396 Japanese Patent Application Laid-open No. 2016-153367 2016/02/12 2016/08/25 - Carbon nanotube dispersion, method for producing the same, thermoelectric conversion element containing carbon nanotubes and method for producing the same CO., LTD. Colloidal dispersion aggregation technology laboratory C01 B 31/02, 101 @ F B 82 Y 40/00 C08J3 / 07 Other Japanese Patent Application No. 2016-024396 Japanese Patent Application Laid-open No. 2016-153367 2016/02/12 2016/08/25 - Carbon nanotube dispersion, method for producing the same, thermoelectric conversion element containing carbon nanotubes and method for producing the same CO., LTD. Colloidal dispersion aggregation technology laboratory C01 B 31/02, 101 @ F B 82 Y 40/00 C08J3 / 07 other
Matching information		
28	Cooperation method (multiple choice) (マッチングニーズタイプ) (貴社のニーズタイプをお選びください。複数選択可。)	□Intellectual property right introduce (知的財産導入) □Export Intellectual property rights (知的財産輸出) □Looking for technology (技術を探す) ■Technology transfer to Taiwan (技術を提供する（技術移転）) □Looking for vendors (供給先を探す（仕入れたい）) □Looking for buyer (提供先を探す（販売したい）) □Looking for product as agent (代理販売する/ブランドを探す) □Looking for agents (代理店を探す) ■Looking for funding (資本調達) □Looking for investment target (投資先を探す) ■Looking for R&D partnership (研究開発パート □Looking for funding (with share) (合資パートナーを探す)

		ナーを探す) ☐ Others (その他)_____
29	Description for matching target (ニーズ具体的内容)	**To realize a low-carbon society**
30	Description for matching means (希望アプローチ先)	■materials(素材) ■components(部品) ■manufacturer (装置メーカー) ■product user (製品ユーザー) ☐agents (代理店) ☐others (その他) _ (with company names that you would like to cooperate with, would be better; 具体的な企業名があればご教示ください)_____ technology/equipment (技術/設備)___Microprocessor IP _____
Information management		
31	Date of filling information (資料記入日)	2018 年 7 月 6 日

該編號之廠商資料不公開

Taiwan-Japan Enterprises Cooperation Information (23/24)

No	Company information			
1	Company name (企業名)	（日本語）株式会社モッタイナイ・エナジー		
		（英語） Mottainai Energy Co., Ltd.		
2	Address (所在地)	（日本語）茨城県つくば市千現 2-1-6		
		（英語） 2-1-6, Sengen, Tsukuba, Ibaragi		
3	Representative (代表者名)	（日本語）西当　弘隆		
		（英語） NISHIATE Hirotaka		
4	Industry field (産業分類)	- Manufacturing (Thermoelectric)		
5	Phone number (電話番号)	+81-90-6486-4163		
6	FAX	-		
7	E-Mail	nishiate.hirotaka@mottainai-energy.com		
8	Website	http://mottainai-energy.com/		
9	Business description (事業内容)	- Thermoelectric material, Thermoelectric module, Thermoelectric measuring device, Thermoelectric measuring service, Thermoelectric application product		
10	Product (主力商品)	Thermoelectric measuring device, Thermoelectric measuring service		
11	Established in (創業･設立)	2016 年 6 月		
12	Personnel (従業員等数)	Management (役員): 1 Formal & Contract (正社員・契約社員): Part time (パート等): 2		
13	Domestic location (国内拠点)	Tsukuba		
14	International location (海外拠点)	-		
15	Main distributor or partner in domestic (主要国内取引先または協力業者)	- Thermoelectric private company, University, Research Institution		
16	International trading partner (主要海外取引先)	-		
Finance information				
17	Capital(資本金)	Yen 0.9M		
		2016	2017	2018(forecast)
18	Sales revenue (売上高)	Yen 11.6M	Yen 14.8M	Yen 20M
19	Revenue (経常利益)	Yen -0.15M	Yen (Calc)	Yen (Calc)

20	Profit (当期利益)	Yen -0.22M	Yen (Calc)	Yen (Calc)
Contact information				
21	Supervisor (業務責任者)	Name： Division： Title：		
		TEL : - FAX : - Mobile phone : +81-90-6486-4163		
		E-MAIL：nishiate.hirotaka@mottainai-energy.com		
		Address：2-1-6, Sengen, Tsukuba, Ibaragi		
22	Contact person (連絡担当者)	Name： Division： Title：		
		TEL： FAX： Mobile phone：		
		E-MAIL：		
		Address：		
		Language you may use： （When communicate with Taiwan's entrepreneurs you may use） ■ Japanese □ English □ Mandarin □ Others：_____		
Technology or product information				
23	Name (技術・製品の名称)	Thermoelectric measuring device, Thermoelectric measuring service		
24	Description (技術・製品の内容)	- Fabrication of measurement related equipment for R&D of customer's requested specification - Contract measurement of thermoelectric power generation module that secured high reproducibility - Assembly contract assembly of new thermoelectric power generation module using new thermoelectric material		
25	Photos (写真等)			
26	Features (including innovation, superiority, difference) (技術・製品の特徴（競合他社の類似商品と比較した場合の優位性や革新性）)	Same as above		

27	ISO or other certificates (免許、許認可、特許、ISO など)	AIST license: 6
Matching information		
28	Cooperation method (multiple choice) (マッチングニーズタイプ) (貴社のニーズタイプをお選びください。複数選択可。)	□Intellectual property right introduce (知的財産導入) □Looking for technology (技術を探す) ■Looking for vendors (供給先を探す（仕入れたい）) □Looking for product as agent (代理販売する/ブランドを探す) □Looking for funding (資本調達) □Looking for R&D partnership (研究開発パートナーを探す) ■Export Intellectual property rights (知的財産輸出) ■Technology transfer to Taiwan (技術を提供する（技術移転）) □Looking for buyer (提供先を探す（販売したい）) □Looking for agents (代理店を探す) □Looking for investment target (投資先を探す) □Looking for funding (with share) (合資パートナーを探す) □ Others _____
29	Description for matching target (ニーズ具体的内容)	**I would like to meet ….** **Theremoelectric researcher in research Institute, Theremoelectric manufacturer**
30	Description for matching means (希望アプローチ先)	□materials(素材) □components(部品) □manufacturer (装置メーカー) □product user (製品ユーザー) □agents (代理店) □others (その他) _ (with company names that you would like to cooperate with, would be better; 具体的な企業名があればご教示ください)_____ technology/equipment (技術/設備)___Microprocessor IP _____
Information management		
31	Date of filling information (資料記入日)	2018 年 6 月 30 日

Taiwan-Japan Enterprises Cooperation Information (24/24)

No	Company information	
1	Company name (企業名)	（日本語）株式会社 Bee Beans Technologies
		（英語） Bee Beans Technologies Co.,Ltd.
2	Address (所在地)	（日本語）茨城県つくば市大穂 109
		（英語） 109, Oho, Tsukuba-shi, Ibaraki 300-3256, Japan
3	Representative (代表者名)	（日本語）浅井 康裕
		（英語） Yasuhiro Asai
4	Industry field (産業分類)	- ELECTRONIC PARTS, DEVICES AND ELECTRONIC CIRCUITS - COMPUTER PROGRAMMING AND OTHER SOFTWARE SERVICES
5	Phone number (電話番号)	+81-29-875-3642
6	FAX	+81-29-875-3564
7	E-Mail	sales@bbtech.co.jp
8	Website	https://www.bbtech.co.jp/en/
9	Business description (事業内容)	- Sales and support of hardware developed by research institutes include KEK and universities - Install and maintenance of the above hardware - Development and support of the software using the above hardware - Development, sales, and support of FPGA library related with SiTCP, hardware, or software - Development, sales, and support of products adopting the above technologies
10	Product (主力商品)	nGEM
11	Established in (創業･設立)	2006 年 9 月
12	Personnel (従業員等数)	Management (役員): 4 Formal & Contract (正社員・契約社員): 16 Part time (パート等): 7
13	Domestic location (国内拠点)	Head Office: Tsukuba-shi, Ibaraki, Japan Tokai Office: Tokai-mura, Naka-gun, Ibaraki, Japan
14	International location (海外拠点)	

15	Main distributor or partner in domestic (主要国内取引先または協力業者)	High Energy Accelerator Research Organization, Japan Atomic Energy Agency, RIKEN, National Institute of Advanced Industrial Science and Technology, Japan Synchrotron Radiation Research Institute, Tokyo University, Kyoto University, Tohoku University, Tsukuba University, Hokkaido University, Kinki University, Osaka University, Kobe University, Kyushu University, Osaka City University		
16	International trading partner (主要海外取引先)			
Finance information				
17	Capital(資本金)	Yen 10M		
		2016/8	2017/8	2018/8(forecast)
18	Sales revenue (売上高)	Yen 178M	Yen 174M	Yen 123M
19	Revenue (経常利益)	Yen 2.51M	Yen 9.12M	n/a
20	Profit (当期利益)	Yen 2.29M	Yen 6.79M	n/a
Contact information				
21	Supervisor (業務責任者)	Name：Yasuhiro Asai Division： Title：CEO and President		
		TEL：+81-29-875-3642 FAX：+81-29-875-3564 Mobile phone：		
		E-MAIL：asai@bbtech.co.jp		
		Address：109, Oho, Tsukuba-shi, Ibaraki 300-3256, Japan		
22	Contact person (連絡担当者)	Name：Takeshi Nobori Division： Title：Marketing Director		
		TEL：+81-29-875-3642 FAX：+81-29-875-3564 Mobile phone：		
		E-MAIL：nobori@bbtech.co.jp		
		Address：109, Oho, Tsukuba-shi, Ibaraki 300-3256, Japan		
		Language you may use： （When communicate with Taiwan's entrepreneurs you may use） ■ Japanese ■ English □ Mandarin □ Others：_____		
Technology or product information				
23	Name (技術・製品の名称)	nGEM		
24	Description (技術・製品の内容)	- The product is an improved GEM type detector specialized for neutron-detection.		

25	Photos (写真等)	
26	Features (including innovation, superiority, difference) (技術・製品の特徴（競合他社の類似商品と比較した場合の優位性や革新性）)	The product is a compact experimental equipment with DAQ board in one united body. A PC and nGEM which take data through network, are enough to acquire data. ● Functionally designed , yet has good maintainability ● Improved data-transfer-efficiency adopting gigabit SiTCP ● High detection-efficiency with improved event-selection-algorithm ＊The specification may change without notice.
27	ISO or other certificates (免許、許認可、特許、ISO など)	
Matching information		
28	Cooperation method (multiple choice) (マッチングニーズタイプ) (貴社のニーズタイプをお選びください。複数選択可。)	□Intellectual property right introduce (知的財産導入) □Export Intellectual property rights (知的財産輸出) □Looking for technology (技術を探す) □Technology transfer to Taiwan (技術を提供する（技術移転）) □Looking for vendors (供給先を探す（仕入れたい）) ■Looking for buyer (提供先を探す（販売したい）) □Looking for product as agent (代理販売する/ブランドを探す) □Looking for agents (代理店を探す) □Looking for funding (資本調達) □Looking for investment target (投資先を探す)

		□Looking for R&D partnership (研究開発パートナーを探す) □Looking for funding (with share) (合資パートナーを探す) □ Others (その他)_____
29	Description for matching target (ニーズ具体的内容)	Research Institutes. Especially research institutes that are studying high energy physics.
30	Description for matching means (希望アプローチ先)	□materials(素材) □components(部品) □manufacturer (装置メーカー) ■product user (製品ユーザー) □agents (代理店) □others (その他) _ (with company names that you would like to cooperate with, would be better; 具体的な企業名があればご教示ください)_____ technology/equipment (技術/設備)___Microprocessor IP _____
Information management		
31	Date of filling information (資料記入日)	2018 年 8 月 31 日