MEDICARE TAIWAN 2017.6.15~18

TMBIA

台灣醫療暨生技器材工業同業公會
Taiwan Medical and Biotech Industry Association

OLILY exhibition design

The copyright of this design & drawing belongs exclusively to Olily Exhibition International Co ., Ltd.
It is prohibited to copy, use, reproduce, offer or issue this design & drawing without our written authorization.
ALL RIGHTS RESERVED.

OLILY 版權所有，翻印必究

醫材公會專區
總面積:315平方公尺

地點:世貿一館

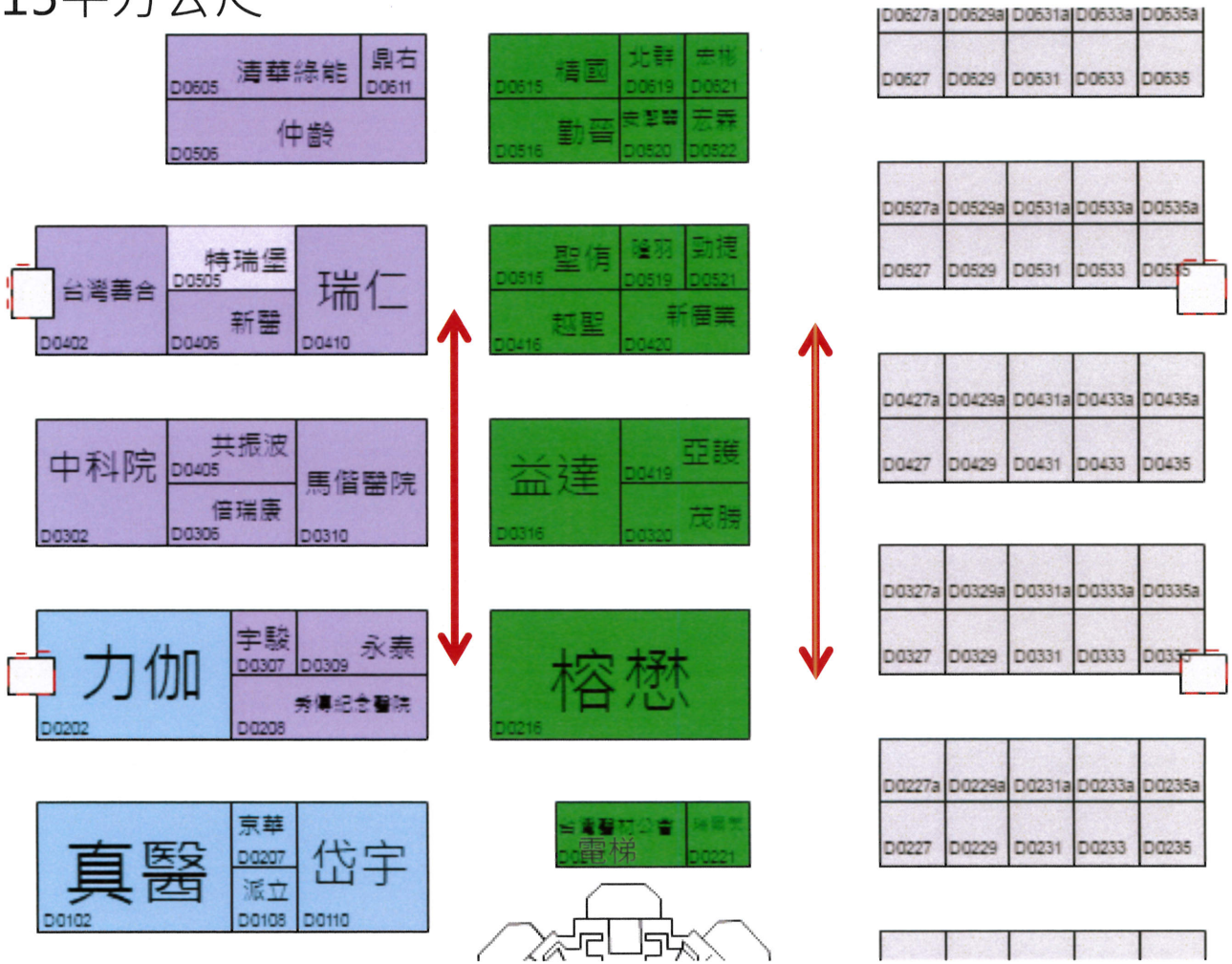

信義路入口

2017 MEDICARE TAIWAN

6/15~6/18

OLILY
exhibition design

The copyright of this design & drawing belongs exclusively to Olily Exhibition International Co ., Ltd.
It is prohibited to copy, use, reproduce, offer or issue this design & drawing without our written authorization.
ALL RIGHTS RESERVED.

OLILY 版權所有，

2017 MEDICARE TAIWAN

6/15~6/18

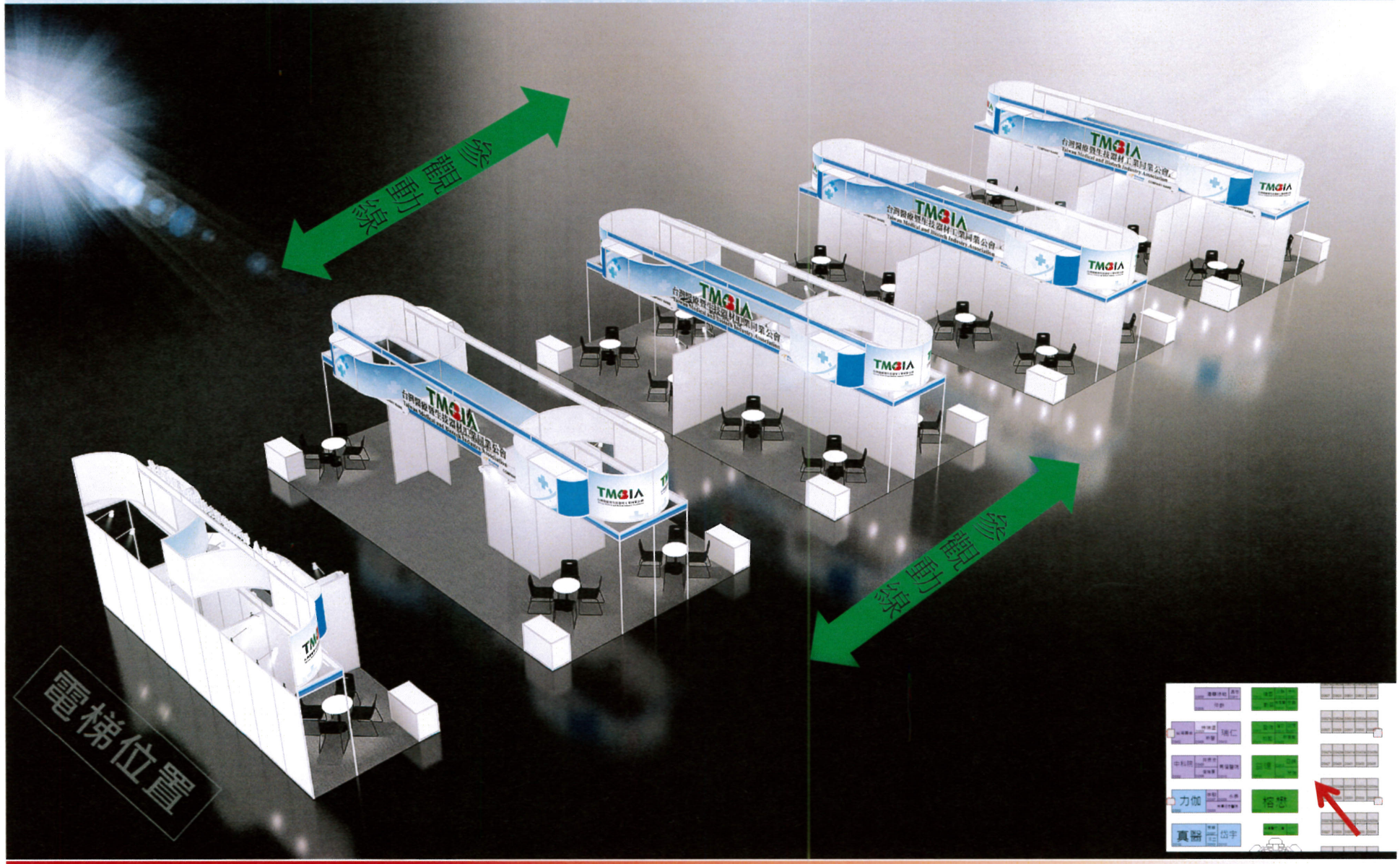

OLILY
exhibition design

The copyright of this design & drawing belongs exclusively to Olily Exhibition International Co ., Ltd.
It is prohibited to copy, use, reproduce, offer or issue this design & drawing without our written authorization.
ALL RIGHTS RESERVED.

OLILY 版權所有，侵犯必究

2017 MEDICARE TAIWAN

6/15~6/18

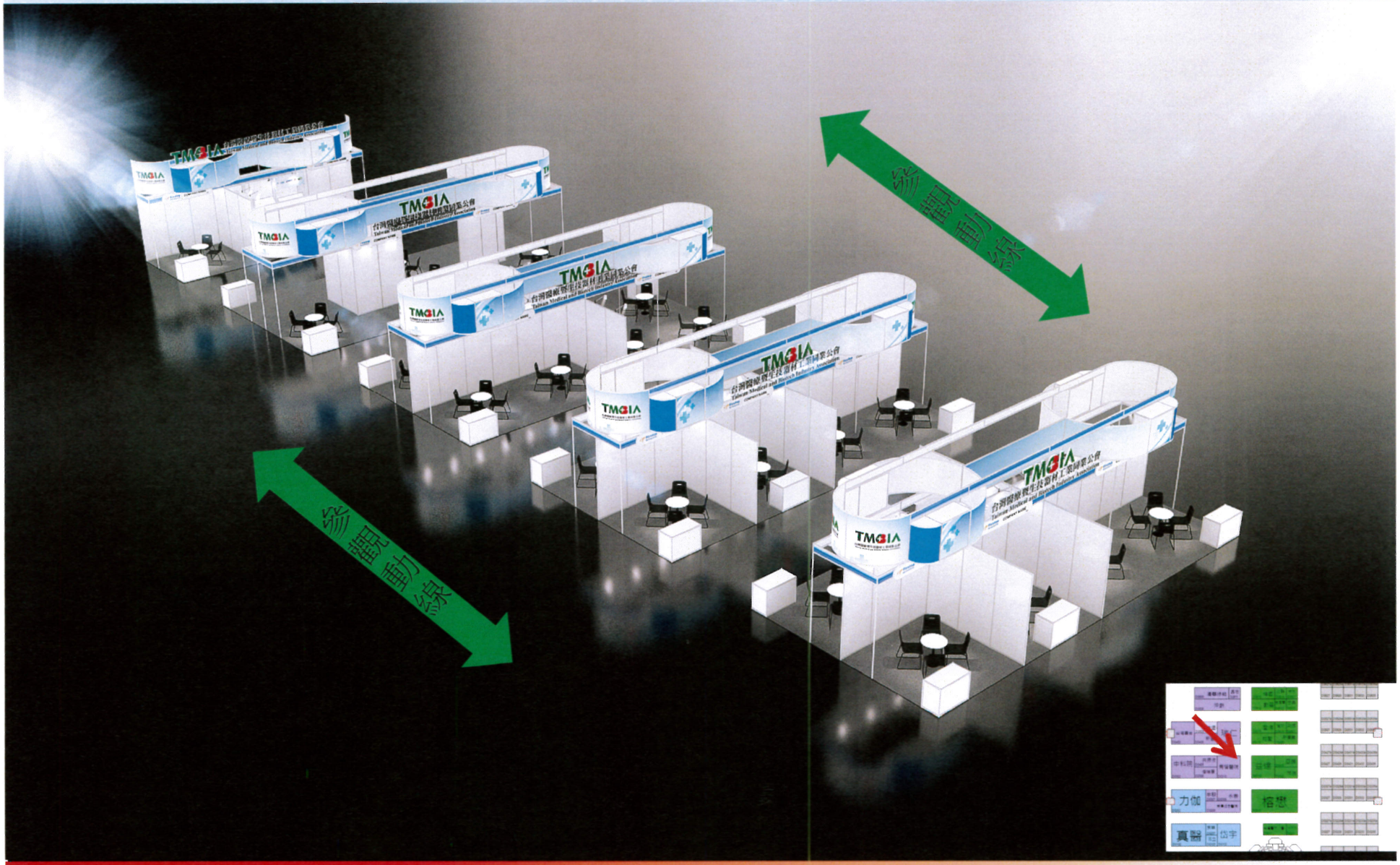

OLILY
exhibition design

The copyright of this design & drawing belongs exclusively to Olily Exhibition International Co ., Ltd.
It is prohibited to copy, use, reproduce, offer or issue this design & drawing without our written authorization.
ALL RIGHTS RESERVED.

2017 MEDICARE TAIWAN

6/15~6/18

OLILY exhibition design

The copyright of this design & drawing belongs exclusively to Olily Exhibition International Co ., Ltd.
It is prohibited to copy, use, reproduce, offer or issue this design & drawing without our written authorization.
ALL RIGHTS RESERVED.

2017 MEDICARE TAIWAN 6/15~6/18

OLILY exhibition design

The copyright of this design & drawing belongs exclusively to Olily Exhibition International Co ., Ltd.
It is prohibited to copy, use, reproduce, offer or issue this design & drawing without our written authorization.
ALL RIGHTS RESERVED.
OLILY 版權所有

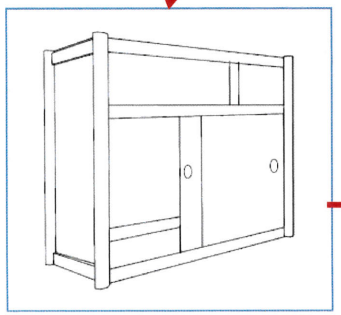

可換

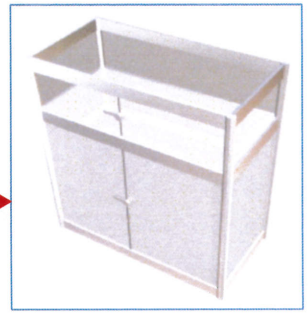

9米平方

公司名招牌	1組
接待台H:100	1組
洽談桌	1組
折疊椅	4張
插座	1組
18W夾燈	4組

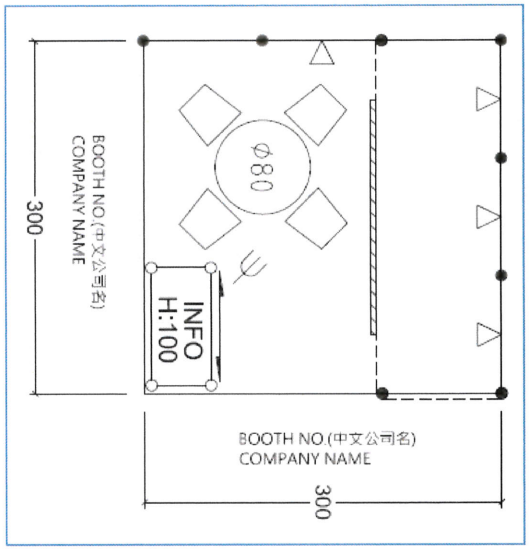

2017 MEDICARE TAIWAN 6/15~6/18

18米平方

公司名招牌	1組
接待台H: 100	1組
洽談桌	2組
洽談椅	8張
插座	2組
18W夾燈	6組

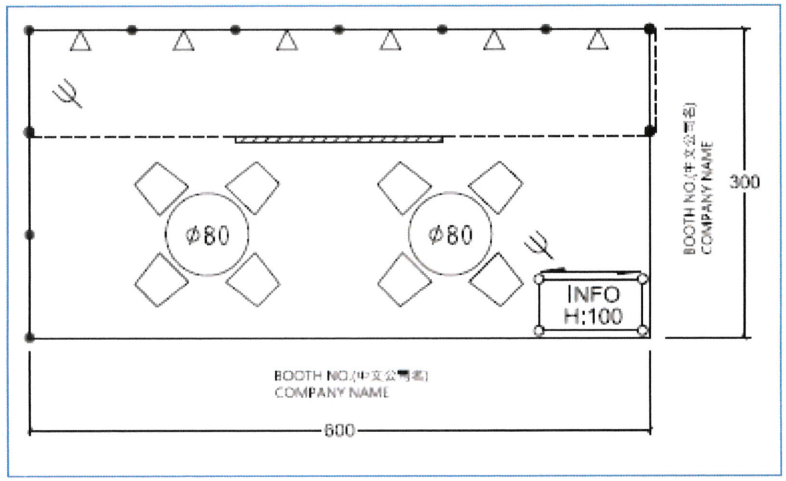

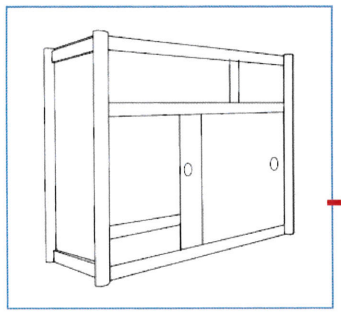

可換

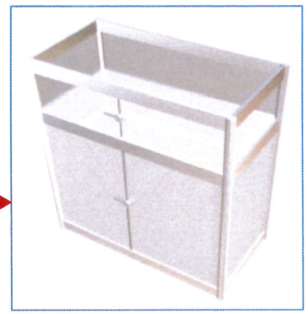

2017 MEDICARE TAIWAN 6/15~6/18

36米平方

公司名招牌	2組
接待台H:100	2組
洽談桌	2組
洽談椅	8張
插座	3組
儲藏隔間	1式
18W夾燈	10組

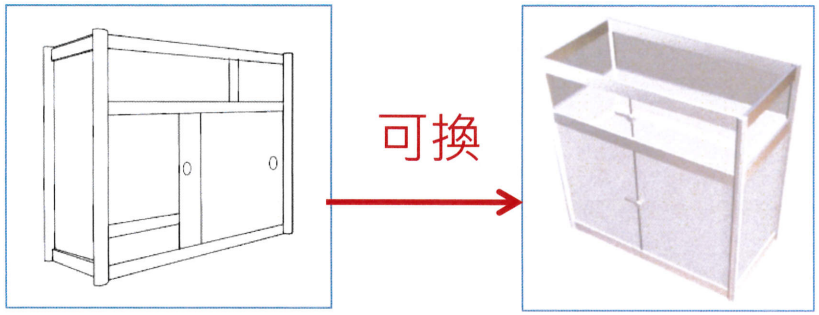

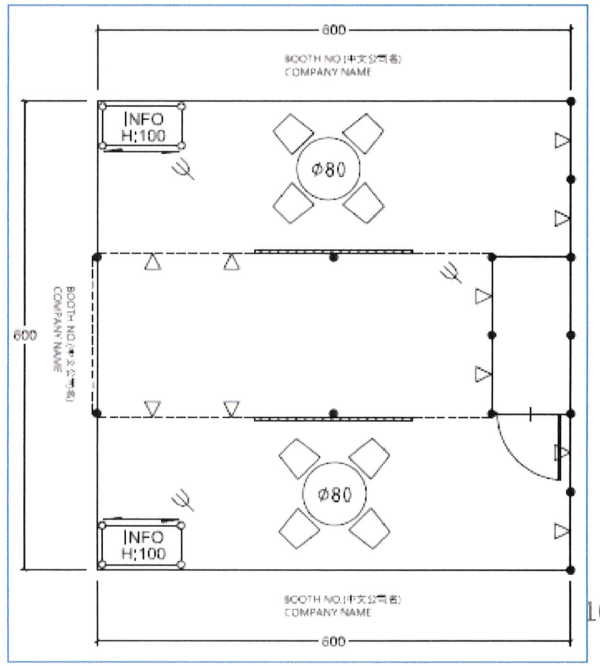

2017 MEDICARE TAIWAN 6/15~6/18

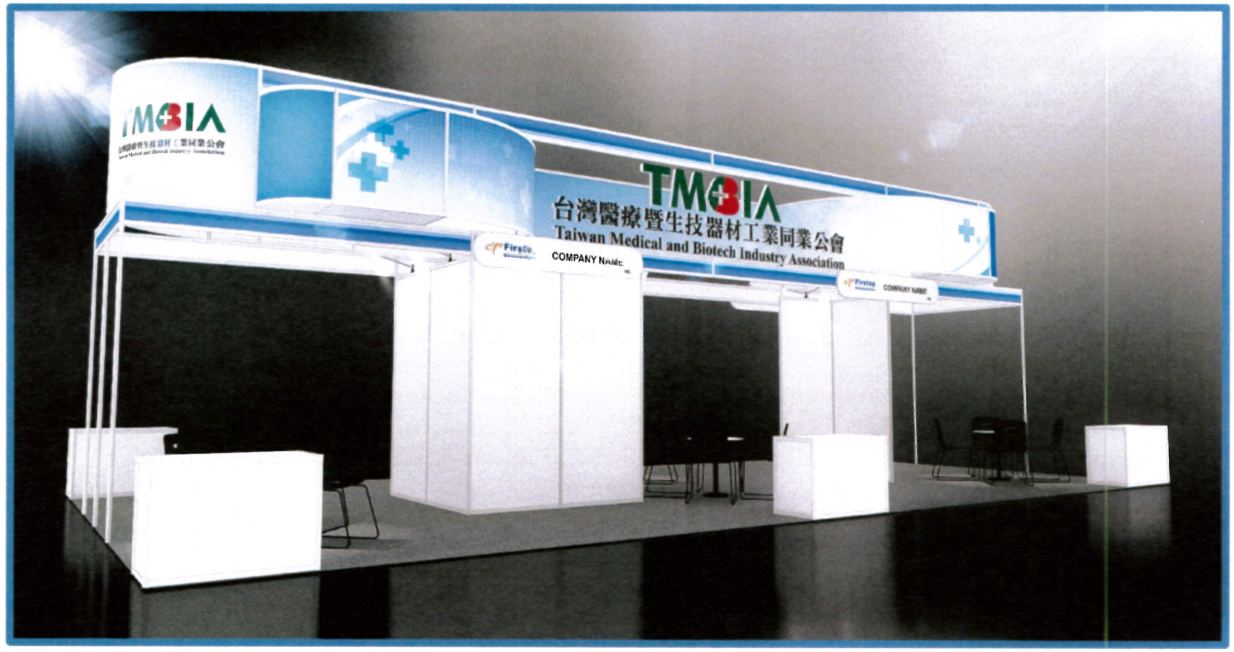

72米平方

公司名招牌	4組
接待台H:100	4組
洽談桌	4組
洽談椅	16張
插座	4組
儲藏隔間	1式
18W夾燈	20組

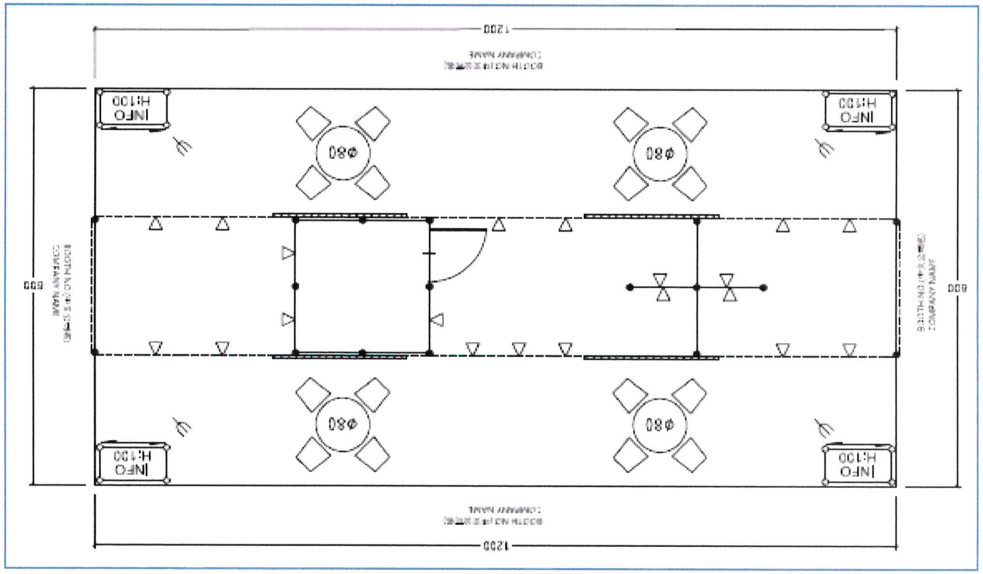

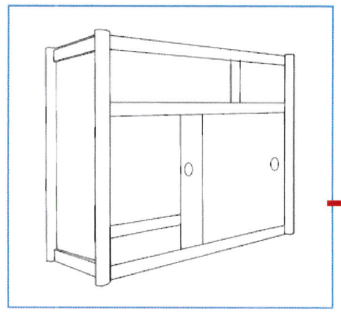

可換

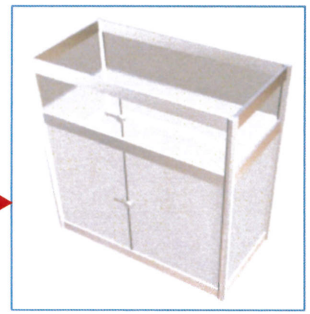

攤位夜間圍布

名片箱

大處著眼小處著手

貼心服務．實用設計

歐立利國際集團

台北 • 上海 • 杜塞道夫　歐立利 助您參展的最佳選擇

專業級　國際展覽　設計與施工的整合

「歐立利」集團於1988年成立，至今累積29年展覽專業的經驗。為提供客戶全球性資源整合服務，團隊陸續成立於台北、上海。從前端諮詢，專案規劃，策略分析，創意發想，設計執行，品質管控，整合性功能使每個客戶參展圓滿成功。歐立利始終堅信「沒有做不到，只有想不到」的核心理念，掌握市場脈動，提供全方位的展場設計與施工服務，以專業及高品質服務成為廠商最佳選擇。

歐立利的服務項目: Olily's Services

國家形象規劃
National Pavilion Design Planning

展覽設計規劃
Exhibition Design Planning

品牌旗艦規劃
Brand Flagship Planning

產品展示空間規劃
Product Display Planning

視覺形象規劃
Visual Design Planning

行銷活動規劃
Marketing Event Planning

OLILY
exhibition design

沒有做不到，只有想不到

Nothing Impossible with Imagination

Web Site: www.olily.com
Blog: www.olily.com/cblog

歐立利的承諾: 創意，我們可以傳達
行銷，我們讓他延續

Olily's Promise: Creativity we can Deliver it
Marketing we can extend it