ICS 11.180.10

草-修 1051247

中華民國國家標準

CNS

輪椅－第 10 部：電動輪椅越障能力試驗

Wheelchairs – Part 10 : Determination of obstacle-climbing ability of electric wheelchairs

CNS 14764-10:2016
T5022-10

中華民國 95 年 2 月 24 日制定公布
Date of Promulgation:2006-02-24

本標準非經經濟部標準檢驗局同意不得翻印

目錄

節次 頁次
前言 2
1. 適用範圍 3
2. 引用標準 3
3. 用語釋義 3
4. 原則 3
5. 試驗設備 3
5.1 試驗平面(test plane) 3
5.2 試驗障礙物(test obstacle) 3
6. 準備 4
7. 試驗程序 5
8. 試驗報告 6
9. 宣告 7
名詞對照 8

(共 8 頁)

前言

本標準係依據 2008 年發行之 ISO 7176-10，不變更技術內容及其標準程式，制定成為中華民國國家標準者。

本標準依標準法之規定，經國家標準審查委員會審定，由主管機關公布之中華民國國家標準。CNS 14964-10:2006 已被廢止並由本標準取代。

本標準係依標準法之規定，經國家標準審查委員會審定，由主管機關公布之中華民國國家標準。

依標準法第四條之規定，國家標準採自願性方式實施。但經各該目的事業主管機關引用全部或部分內容為法規者，從其規定。

本標準並未建議所有安全事項，使用本標準前應適當建立相關維護安全與健康作業，並且遵守相關法規之規定。

本標準之部分內容，可能涉及專利權、商標權與著作權，主管機關及標準專責機關不負責任何或所有此類專利權、商標權與著作權之鑑別。

1. 適用範圍

本標準規定預期單人乘坐，最大標稱速率不超過 15 km/h 之電動輪椅包含代步車上、下障礙物之試驗方法。

2. 引用標準

下列標準因本標準所引用，成為本標準之一部分。下列引用標準適用最新版(包括補充增修)。

CNS 13575-1　輪椅–專有名詞、術語及定義

CNS 14964-11　輪椅–第 11 部：測試用假人

CNS 14964-13　輪椅–第 13 部：測試表面摩擦係數之測定

CNS 14964-15　輪椅–第 15 部：資訊宣告、文件與標示之要求

CNS 14964-22　輪椅–第 22 部：設定程序

3. 用語釋義

參照 CNS 13575-1。

4. 原則

以多次試驗決定電動輪椅通過障礙物如邊石或階梯之能力。

5. 試驗設備

5.1 試驗平面(test plane)

堅硬平整表面，其應位於相距 5 mm 之二假想平行水平面內且與水平之夾角在±0.5°內，其表面摩擦係數須符合 CNS 14964-13 要求。

備考：足以容納輪椅與距輪椅前方 0.5 m 試驗障礙物(5.2)之試驗平面即足夠。

5.2 試驗障礙物(test obstacle)

為四方形平板其可改變高度，每一增量為 5 mm 至最大高度 200 mm，參照圖 1，相對許可差 5 %或許可差± 2 mm，取其大者。一般起始高度應為 10 mm 或由試驗實驗室與輪椅供應商雙方同意之 5 mm 倍數之高度。

如：起始高度可為 50 mm。

備考：可使用可連續調整高度之試驗障礙物。

障礙物面積應大到可讓試驗輪椅爬上後所有輪子均可停在其上，且大到輪椅可置於如 7.5(b)所述之障礙物之上。

最上層障礙物前緣應平滑且為圓角，其半徑 r 為 3^{+2}_{0} mm，參照圖 1。障礙物前平面(不含頂部圓角)應位於相距 4 mm 之二平行垂直平面間，障礙物前平面與上平面夾角應為 90°±1°。

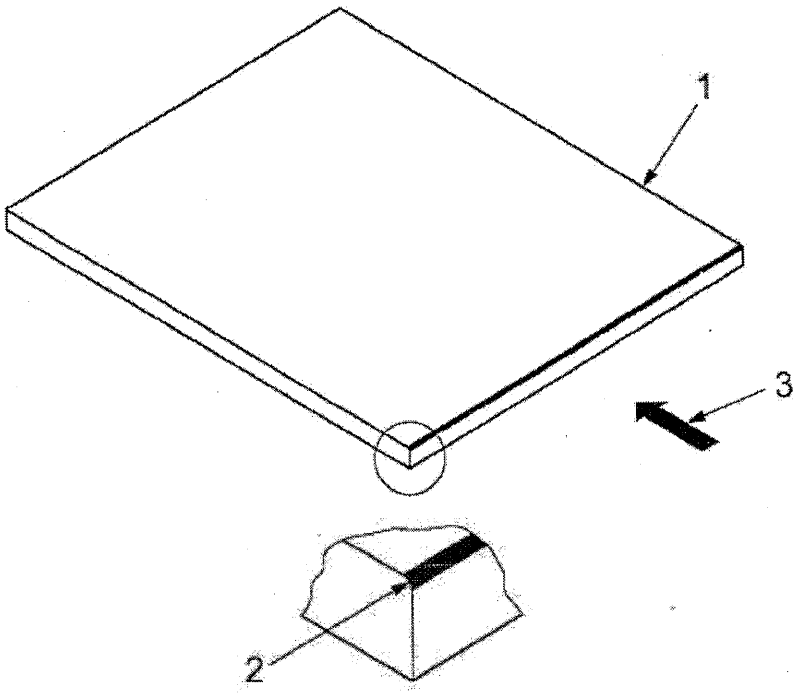

說明

1 試驗障礙物

2 上前緣圓角 r

3 接近方向

圖 1　試驗用障礙物

與輪椅接觸之障礙物表面摩擦係數應符合 CNS 14964-13 要求。障礙物應固定在試驗平面上，以防止在試驗過程中移動。

6. 準備

依下述順序準備輪椅。

(a) 安裝依製造商規定之最大電池。

(b) 依 CNS 14964-22 設定輪椅。

依下述方法之一對輪椅施加負載。

(1) 依 CNS 14964-11 選擇適當之試驗用假人並依 CNS 14964-22 規定固定。

(2) 使用真人試驗者其與(1)規定之假人總質量相同($^{+2}_{0}$kg)，且其質量平均分布於輪椅身體支撐系統。

若使用真人進行試驗，應採取適當措施以保護試驗人員安全。

(c) 若可行，除輪子與製造商預期作為爬障礙物之裝置外，調整所有可能會與障礙物接觸之零件，以避免試驗時先撞到障礙物。

如：足支撐(foot support)。

(d) 量測並記錄足支撐最低部位高於試驗平面之高度，許可差±1 mm。

(e) 若可行，設定防傾裝置防止試驗期間與試驗平面及障礙物接觸，否則設定在最

高位置。

備考：此不包含移除防傾裝置。

(f) 若為製造商預期作為上、下障礙物之裝置，依製造商手冊設定以進行試驗。如：階石爬升器(kerb climber)。

7. 試驗程序

警語：以下試驗可能具危險性，應採取適當措施以保護試驗人員安全。

7.1 依下述試驗順序執行試驗。

(a) 依 5.2 設定障礙物起始高度。

(b) 將輪椅置於試驗平面上(面對上障礙物方向)與障礙物前緣保持 90°±5°，所有萬向輪調整至拖曳方向，輪椅與障礙物接觸。

(c) 操作控制器以最大速率指令，驅動輪椅爬上障礙物，待所有支撐輪爬上障礙物上表面後，立即釋放控制器。記錄除輪子與預期作為爬升障礙物裝置外，任何與障礙物接觸之部件。

(d) 依 5.2 增加一增量高度，重複(a)至(c)。

(e) 重複(d)直到輪椅無法爬上障礙物或顯現失控行為，如傾倒或控制器釋放後輪椅繼續加速。

(f) 記錄輪椅可以爬上障礙物之最大高度。

7.2 參照圖 2，設定助跑距離 500 mm±25 mm (障礙物與輪椅首先與障礙物接觸部位之水平距離)，重複 7.1。

單位：mm

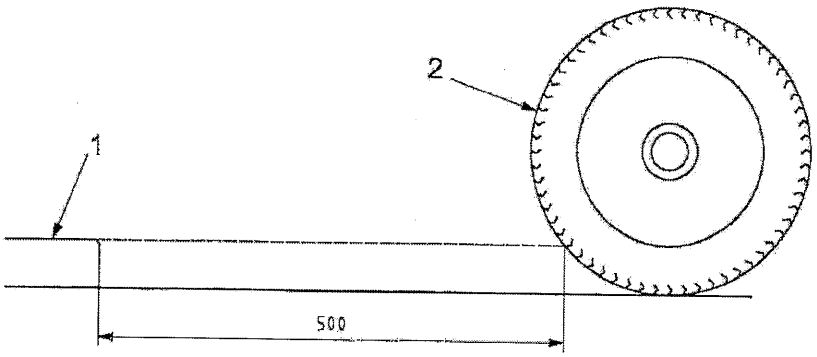

說明

1 試驗障礙物

2 首先與障礙物接觸之輪椅部件

備考：此以輪子為例。

圖 2 助跑之量測

7.3 背向上障礙物方向，重複 **7.1**。

7.4 依圖 2，設定助跑距離 500 mm±25 mm (障礙物與輪椅首先與障礙物接觸部位之水平距離)，重複 7.3。

7.5 依下述試驗順序執行試驗。

(a) 依 5.2 設定障礙物起始高度。

(b) 將輪椅置於障礙物上(面對下障礙物方向)，設定與障礙物最接近之支撐輪接觸點距離為 500 mm±25 mm，並與障礙物前緣保持(90±5)°，所有萬向輪調整至拖曳方向。

(c) 操作控制器以最大速率指令，驅動輪椅往前爬下障礙物，待所有支撐輪爬下障礙物及輪椅無任何部位與障礙物接觸後，立即釋放控制器。記錄除輪子與預期作為爬升障礙物裝置外，任何與障礙物接觸之部件。

(d) 依 5.2 增加一增量高度，重複(a)至(c)。

(e) 重複(d)直到輪椅無法爬下障礙物或顯現失控行為，如傾倒或控制器釋放後輪椅繼續加速。

(f) 記錄輪椅可以爬下障礙物之最大高度。

7.6 背向下障礙物方向，重複 7.5。

7.7 若使用手冊中有其他建議上、下障礙物之方法時，若適用依建議之方法重複 7.1 至 7.4 或 7.5 與 7.6。

若使用手冊中，製造商建議之設定與 7.1 至 7.6 不同時，則依製造商之建議。

如 可能包含可選用之技術。

－ 輪椅可設定較慢之爬行速率。

－ 使用不同之接近角度與助跑距離。

－ 可改變使用者或介護者可調整之控制器設定。

7.8 若適用時，若製造商配置預期作為上、下障礙物裝置可以設定至失效時，若適用將其設定至失效重複 7.1 至 7.4 及/或 7.5 與 7.6。

7.9 若輪椅有超過一個以上會影響上、下障礙物能力之操作模式時，每一個操作模式重複 7.1 至 7.8。

如：四輪驅動模式、室內模式、室外模式及站立模式。

8. 試驗報告

試驗報告應包含下述資訊。

(a) 依本標準進行試驗。

(b) 試驗機構名稱與地址。

(c) 試驗機構之認證。

(d) 輪椅製造商名稱與地址。

(e) 試驗報告發佈日期。

(f) 輪椅型式、序號及/或批號。

(g) 試驗用假人質量或真人駕駛與配重之總質量。

(h) 輪椅依 CNS 14964-22 之設定細節。

(i) 試驗期間，輪椅配置之照片。

(j) 7.1 至 7.9 之試驗結果。

(k) 若配置製造商預期作為上及/或下障礙物之裝置。

(l) 足支撐最低點距地面之高度。

(m) 任何製造商建議上及/或下障礙物之方法細節及 7.8 之試驗結果。

(n) 所有操作模式之 7.9 試驗結果。

9. 宣告

應依 CNS 14964-15 規定之格式，將下述試驗結果揭露於製造商規格表中。

(a) 可以爬上及爬下障礙物最大參考操作高度_____mm。

備考：此為依 7.1 至 7.6 試驗結果之最小值。

(b) 依製造商建議操作可以爬上與爬下障礙物之最大高度_____mm。

備考：此為依 7.7 至 7.9 試驗結果之最小值。

名詞對照

F	
foot support	足支撐
K	
kerb climber	階石爬升器
T	
test obstacle	試驗障礙物
test plane	試驗平面

相對應國際標準

ISO 7176-10:2008 Wheelchairs – Part 10: Determination of obstacle-climbing ability of electric wheelchairs

修訂說明：因應 2015 年版 ISO 9001 標準之改訂及發展趨勢，修訂 CNS 12681 國家標準，以協助國內業者提升品質管理水準，順應國際發展趨勢，本修訂草案係參考 ISO/DIS 9001:2014 資料編擬而成。

INTERNATIONAL STANDARD

ISO 7176-10

Second edition
2008-11-01

Wheelchairs —

Part 10: Determination of obstacle-climbing ability of electrically powered wheelchairs

Fauteuils roulants —

Partie 10: Détermination de l'aptitude des fauteuils roulants électriques à gravir les obstacles

標準檢驗局
內部公務使用

經濟部標準檢驗局
97. 10. 30
資料中心

Reference number
ISO 7176-10:2008(E)

© ISO 2008

PDF disclaimer

This PDF file may contain embedded typefaces. In accordance with Adobe's licensing policy, this file may be printed or viewed but shall not be edited unless the typefaces which are embedded are licensed to and installed on the computer performing the editing. In downloading this file, parties accept therein the responsibility of not infringing Adobe's licensing policy. The ISO Central Secretariat accepts no liability in this area.

Adobe is a trademark of Adobe Systems Incorporated.

Details of the software products used to create this PDF file can be found in the General Info relative to the file; the PDF-creation parameters were optimized for printing. Every care has been taken to ensure that the file is suitable for use by ISO member bodies. In the unlikely event that a problem relating to it is found, please inform the Central Secretariat at the address given below.

標準檢驗局
內部公務使用

COPYRIGHT PROTECTED DOCUMENT

© ISO 2008

All rights reserved. Unless otherwise specified, no part of this publication may be reproduced or utilized in any form or by any means, electronic or mechanical, including photocopying and microfilm, without permission in writing from either ISO at the address below or ISO's member body in the country of the requester.

ISO copyright office
Case postale 56 • CH-1211 Geneva 20
Tel. + 41 22 749 01 11
Fax + 41 22 749 09 47
E-mail copyright@iso.org
Web www.iso.org

Published in Switzerland

© ISO 2008 – All rights reserved

標準檢驗局
內部公務使用

Foreword

ISO (the International Organization for Standardization) is a worldwide federation of national standards bodies (ISO member bodies). The work of preparing International Standards is normally carried out through ISO technical committees. Each member body interested in a subject for which a technical committee has been established has the right to be represented on that committee. International organizations, governmental and non-governmental, in liaison with ISO, also take part in the work. ISO collaborates closely with the International Electrotechnical Commission (IEC) on all matters of electrotechnical standardization.

International Standards are drafted in accordance with the rules given in the ISO/IEC Directives, Part 2.

The main task of technical committees is to prepare International Standards. Draft International Standards adopted by the technical committees are circulated to the member bodies for voting. Publication as an International Standard requires approval by at least 75 % of the member bodies casting a vote.

Attention is drawn to the possibility that some of the elements of this document may be the subject of patent rights. ISO shall not be held responsible for identifying any or all such patent rights.

ISO 7176-10 was prepared by Technical Committee ISO/TC 173, *Assistive products for persons with disability*, Subcommittee SC 1, *Wheelchairs*.

This second edition cancels and replaces the first edition (ISO 7176-10:1988), which has been technically revised.

ISO 7176 consists of the following parts, under the general title *Wheelchairs*:

— *Part 1: Determination of static stability*

— *Part 2: Determination of dynamic stability of electric wheelchairs*

— *Part 3: Determination of effectiveness of brakes*

— *Part 4: Energy consumption of electric wheelchairs and scooters for determination of theoretical distance range*

— *Part 5: Determination of dimensions, mass and manoeuvring space*

— *Part 6: Determination of maximum speed, acceleration and deceleration of electric wheelchairs*

— *Part 7: Measurement of seating and wheel dimensions*

— *Part 8: Requirements and test methods for static, impact and fatigue strengths*

— *Part 9: Climatic tests for electric wheelchairs*

— *Part 10: Determination of obstacle-climbing ability of electrically powered wheelchairs*

— *Part 11: Test dummies*

— *Part 13: Determination of coefficient of friction of test surfaces*

— *Part 14: Power and control systems for electrically powered wheelchairs and scooters — Requirements and test methods*

© ISO 2008 – All rights reserved

— *Part 15: Requirements for information disclosure, documentation and labelling*

— *Part 16: Resistance to ignition of upholstered parts — Requirements and test methods*

— *Part 19: Wheeled mobility devices for use as seats in motor vehicles*

— *Part 21: Requirements and test methods for electromagnetic compatibility of electrically powered wheelchairs and scooters, and battery chargers*

— *Part 22: Set-up procedures*

— *Part 23: Requirements and test methods for attendant-operated stair-climbing devices*

— *Part 24: Requirements and test methods for user-operated stair-climbing devices*

— *Part 26: Vocabulary*

A Technical Report (ISO/TR 13570-1, *Wheelchairs — Part 1: Guidelines for the application of the ISO 7176 series on wheelchairs*) is also available, giving information on how to use the ISO 7176 standards when selecting a wheelchair and helping readers to understand the purpose for, and content of, the International Standards on wheelchairs.

標準檢驗局
內部公務使用

© ISO 2008 – All rights reserved

Introduction

The ability of an electrically powered wheelchair to climb and descend obstacles can be an important factor in selecting the most appropriate wheelchair for a person, both in terms of access and safety.

Access may be affected by the ability of the wheelchair to safely negotiate obstacles, such as door thresholds, changes in heights of driving surfaces, and kerbs.

The heights of obstacles a wheelchair is capable of climbing can differ from the heights of those it can descend. However, it is important for wheelchair operators and prescribers to be able to know the height of an obstacle that a wheelchair can both ascend and descend. The obstacle-climbing and -descending performance of a wheelchair can also depend on the technique used to operate the wheelchair. The performance can also be affected by the use of alternative operating modes, such as four-wheel drive.

This part of ISO 7176 specifies a consistent method for determining the obstacle-climbing and -descending ability of electrically powered wheelchairs to provide comparable results.

標準檢驗局
內部公務使用

© ISO 2008 – All rights reserved

標準檢驗局
內部公務使用

Wheelchairs —

Part 10: Determination of obstacle-climbing ability of electrically powered wheelchairs

1 Scope

This part of ISO 7176 specifies test methods for determining the ability of electrically powered wheelchairs, including scooters, intended to carry one person, with a maximum nominal speed not exceeding 15 km/h, to climb and descend obstacles.

2 Normative references

The following referenced documents are indispensable for the application of this document. For dated references, only the edition cited applies. For undated references, the latest edition of the referenced document (including any amendments) applies.

ISO 7176-11, *Wheelchairs — Part 11: Test dummies*

ISO 7176-13, *Wheelchairs — Part 13: Determination of coefficient of friction of test surfaces*

ISO 7176-15, *Wheelchairs — Part 15: Requirements for information disclosure, documentation and labelling*

ISO 7176-22, *Wheelchairs — Part 22: Set-up procedures*

ISO 7176-26, *Wheelchairs — Part 26: Vocabulary*

3 Terms and definitions

For the purposes of this part of ISO 7176, the terms and definitions given in ISO 7176-26 apply.

4 Principle

A number of tests are performed to determine the ability of electrically powered wheelchairs to negotiate obstacles such as kerbs and steps.

5 Test equipment

5.1 Test plane, a flat and hard plane such that its whole surface is contained between two imaginary horizontal parallel planes 5 mm apart and horizontal within ± 0,5°, and with a coefficient of friction as specified in ISO 7176-13.

NOTE A test plane capable of accommodating the test obstacle (5.2) and the test wheelchair, placed 0,5 m in front of the obstacle, and facing it, is usually sufficient.

© ISO 2008 – All rights reserved

5.2 Test obstacle, an obstacle as shown in Figure 1, which can be varied in height in increments of 5 mm to a height of 200 mm, with a relative tolerance of 5 % or a tolerance of ± 2 mm, whichever is the greater. The nominal starting height shall be 10 mm, or any multiple of 5 mm chosen by agreement between the test laboratory and the supplier of the wheelchair.

EXAMPLE The starting height could be 50 mm.

NOTE A test obstacle with a continuously adjustable height may be used.

The upper surface of the obstacle shall be sufficiently large that the wheelchair can climb on to the obstacle and come to rest with all wheels accommodated on the obstacle at the same time and sufficiently large that the wheelchair can be placed on the obstacle as described in 7.5 b).

The upper front edge of the obstacle shall be smooth and shall have a radius, r, of $3\,^{+2}_{0}$ mm (see Figure 1). The front face of the obstacle, excluding the radius at the top, shall lie between two imaginary vertical planes 4 mm apart. The angle between the front edge of the obstacle and the upper surface shall be 90° ± 1°.

The surface of the obstacle that can come into contact with the wheelchair shall have a coefficient of friction as specified in ISO 7176-13. The obstacle shall be fixed to the test plane to prevent movement of the obstacle during the test.

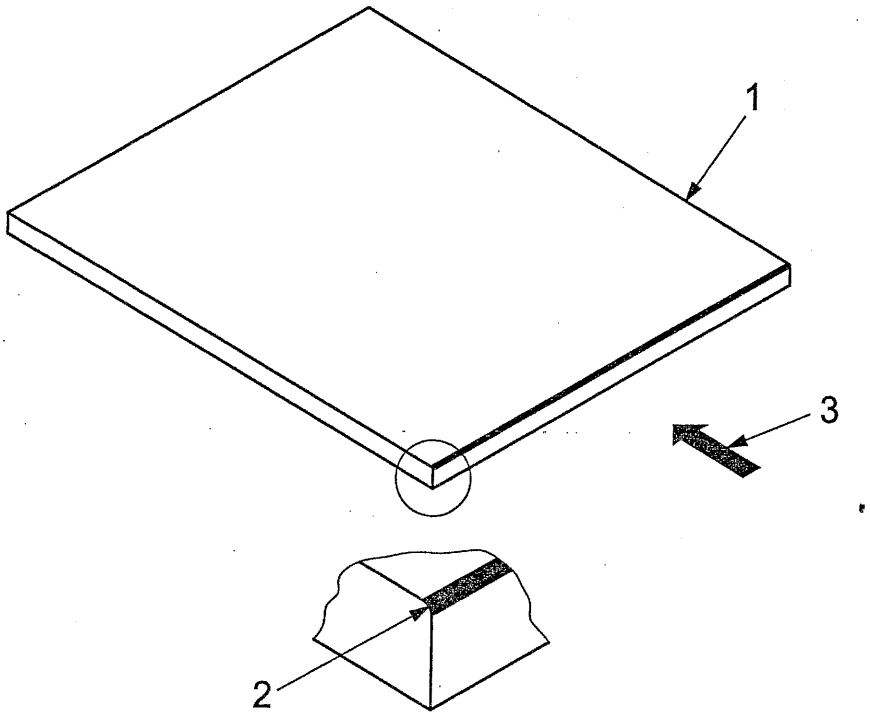

Key

1 test obstacle
2 upper front edge with radius r
3 direction of approach

Figure 1 — Test obstacle

6 Preparation

Carry out the following preparation sequence.

a) Fit the largest battery specified by the manufacturer.

標準檢驗局
內部公務使用

© ISO 2008 – All rights reserved

標準檢驗局
內部公務使用

b) Set up the wheelchair as specified in ISO 7176-22.

Load the wheelchair using one of the following:

1) a dummy as specified in ISO 7176-11, selected and fitted as specified in ISO 7176-22;

2) a human test occupant, combined with a mass evenly distributed over the body support system of the wheelchair such that the total mass is within $^{+2}_{0}$ kg of the mass of the dummy specified in Item 1).

Where a human test occupant is used, it is essential that appropriate precautions be taken to ensure the person's safety.

c) If practicable, adjust all parts that might come into contact with the obstacle, other than the wheels and devices intended by the manufacturer to facilitate the climbing of obstacles, to prevent them striking the obstacle first.

EXAMPLE Foot supports.

d) Measure and record the height above the test plane of the lowest part of the foot supports to an accuracy of ± 1 mm.

e) If practicable, set anti-tipping devices to prevent contact with the test plane and test obstacle during the performance of the tests, otherwise set them at their highest position.

NOTE This does not include removal of anti-tipping devices.

f) If devices intended by the manufacturer to facilitate the climbing or descending of obstacles are present, follow the manufacturer's instructions to set them in a manner applicable to the test being carried out.

EXAMPLE Kerb climbers.

7 Test procedures

WARNING The following tests can be hazardous. Take appropriate safety precautions to prevent injury to test personnel.

7.1 Carry out the following test sequence.

a) Set the test obstacle at the starting height specified in 5.2.

b) Position the wheelchair on the test plane at an angle of incidence to the obstacle of 90° ± 5°, with all castors aligned in the trailing position, and with the wheelchair in contact with the obstacle.

c) With the control device set for full-speed command, drive the wheelchair forwards so that it completely mounts the obstacle with all supporting wheels on the obstacle's upper surface. Immediately release the control device. Record whether any part of the wheelchair, other than the wheels and devices intended by the manufacturer to facilitate the climbing of obstacles, came into contact with the obstacle.

d) Increase the height of the obstacle by one increment as specified in 5.2 and repeat a) to c).

e) Repeat d) until the wheelchair can no longer climb the obstacle or exhibits uncontrolled behaviour, such as tipping over or continuing to accelerate after the control device is released.

f) Record the maximum height of the obstacle that the wheelchair is able to climb.

© ISO 2008 – All rights reserved

標準檢驗局
內部公務使用

7.2 Repeat the test procedure specified in 7.1, with a run-up of 500 mm ± 25 mm measured as the horizontal distance between the obstacle and that part of the wheelchair which will first come into contact with the obstacle (see Figure 2).

7.3 Repeat the test procedure specified in 7.1, but with the wheelchair facing rearwards when climbing the obstacle.

7.4 Repeat the test procedure specified in 7.3, but with a run-up of 500 mm ± 25 mm measured as the horizontal distance between the obstacle and that part of the wheelchair which will first come into contact with the obstacle (see Figure 2).

Dimensions in millimetres

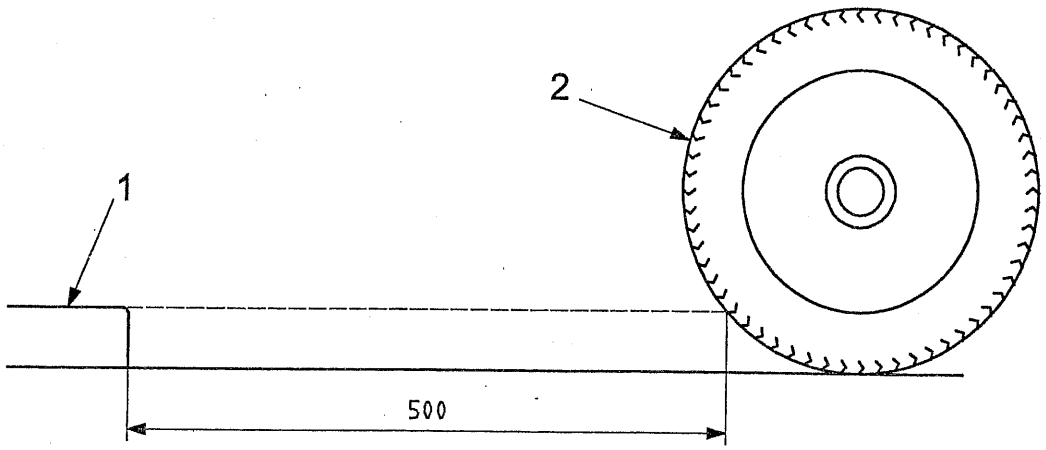

Key

1 test obstacle

2 part of the wheelchair that will first come into contact with the obstacle

NOTE A wheel is shown as an example.

Figure 2 — Measurement of run-up

7.5 Carry out the following test sequence.

a) Set the test obstacle at the starting height specified in 5.2.

b) Position the wheelchair on the obstacle at an angle of incidence to the front edge of 90° ± 5° and with a distance of 500 mm ± 25 mm between the edge and the point(s) of contact of the nearest supporting wheel(s). Align all castors in the trailing position.

c) With the control device set for full-speed command, drive the wheelchair forward off the obstacle until all supporting wheels are on the test plane and no part of the wheelchair remains in contact with the obstacle. Immediately release the control device. Record whether any part of the wheelchair, other than the wheels and devices intended by the manufacturer to facilitate the descending of obstacles, came into contact with the obstacle.

d) Increase the height of the obstacle by one increment as specified in 5.2 and repeat a) to c).

e) Repeat d) until the wheelchair can no longer descend the obstacle or exhibits uncontrolled behaviour, such as tipping over or continuing to accelerate after the control device is released.

f) Record the maximum height of the obstacle that the wheelchair is able to descend.

7.6 Repeat the test procedure specified in 7.5, but with the wheelchair facing rearwards when descending the obstacle.

© ISO 2008 – All rights reserved

7.7 If any other technique is recommended in the user manual for climbing or descending obstacles, repeat the test procedures specified in 7.1 to 7.4, or 7.5 and 7.6, as applicable, using the manufacturer's recommended technique.

If, in the user manual, the manufacturer recommends settings different from those used in 7.1 to 7.6, follow the manufacturer's recommendations.

EXAMPLE Alternative techniques might include

— setting the wheelchair speed to climb more slowly,

— using a different angle of approach or run-up distance, and

— changing occupant-adjustable or assistant-adjustable controller settings.

7.8 If the wheelchair is equipped with devices intended by the manufacturer to facilitate the climbing and/or descending of obstacles that can be set to be inoperative, set them to be inoperative and repeat the test procedures specified in 7.1 to 7.4, and/or 7.5 and 7.6, as applicable.

7.9 If the wheelchair has more than one mode of operation which can affect the ability of the wheelchair to climb or descend obstacles, repeat the test procedures specified in 7.1 to 7.8 for each operating mode.

EXAMPLE Four-wheel drive mode, indoor mode, outdoor mode, standing mode.

8 Test report

The test report shall contain the following information:

標準檢驗局
內部公務使用

a) a reference to this part of ISO 7176;

b) the name and address of the testing institution;

c) the accreditation of the test laboratory;

d) the name and address of the manufacturer of the wheelchair;

e) the date of issue of the test report;

f) the wheelchair type and any serial and/or batch numbers;

g) the mass of the dummy or, if a person is used, the total mass of the driver and weights;

h) details of the set-up of the wheelchair as specified in ISO 7176-22;

i) a photograph of the wheelchair equipped as during the tests;

j) the results of the tests specified in 7.1 to 7.9;

k) whether devices intended by the manufacturer to facilitate the climbing and/or descending of obstacles were fitted;

l) the height from the ground to the lowest point of the foot supports;

m) details of any obstacle climbing and/or descending techniques recommended by the manufacturer and used in the tests specified in 7.8;

n) details of the operating modes used in the tests specified in 7.9.

© ISO 2008 – All rights reserved

9 Disclosure

The following results shall be disclosed in the manufacturer's specification sheets in accordance with the format specified in ISO 7176-15:

a) Maximum obstacle height that can be climbed and descended, reference operation .....mm;

NOTE This is the minimum of the results recorded in tests 7.1 to 7.6.

b) Maximum obstacle height that can be climbed and descended, manufacturer's recommended operation .....mm.

NOTE This is minimum height of the results of tests 7.7 to 7.9.

標準檢驗局
內部公務使用

© ISO 2008 – All rights reserved

標準檢驗局
178167

標準檢驗局
內部公務使用

ICS 11.180.10
Price based on 6 pages

© ISO 2008 – All rights reserved