檔　　號：

保存年限：

經濟部標準檢驗局第一組　函

機關地址：100臺北市中正區濟南路1段4號
聯絡人/聯絡電話：吳啓瑞/33435114-114
電子郵件：jerrycr.wu@bsmi.gov.tw
傳　　真：33435172

241
新北市三重區重新路5段609巷6號3樓之3
受文者：台灣醫療暨生技器材工業同業公會

台灣醫療暨生技器材工業同業公會
收 105. 12. 30 文
檔號: 105096

發文日期：中華民國105年12月28日
發文字號：經標一組字第10510019360號
速別：普通件
密等及解密條件或保密期限：
附件：如文

主旨：請就本局編擬之CNS 14964-4(草-修1051246)輪椅－第4部：電動輪椅及代步車之耗能-測定理論行駛距離及CNS14964-10(草-修1051247)輪椅－第10部：電動輪椅越障能力試驗等2種國家標準草案惠提意見，如無意見亦請在空白意見書上註明無意見，並請於106年3月5日前惠復（或電子郵件寄jerrycr.wu@bsmi.gov.tw）本局第一組第四科吳啟瑞。

說明：

一、檢附上開草案暨空白意見書各1份 。

二、配合政府節能減碳、無紙化政策，可至本局國家標準審議平台（網址：http://comments.bsmi.gov.tw/welcome.action）逕予審查及修改。

三、貴單位對外貿易如有遭遇技術貿易障礙之情事，可將所遭遇困難之進口國家、發生時間及原因，以及需要政府提供之協助等相關資訊，填列於意見表之「技術性貿易障礙調查」欄，本局將於適當場合(如WTO/TBT會議)提出特殊貿易關切事項，以維護我國權益。

正本：方委員毓廷、王委員舜民、王委員維銘、李委員淑貞、胡委員景灝、馬委員海霞、常委員挽瀾、張委員力山、張委員日聖、張委員勝祺、陳委員德請、曾委員明基、黃委員興閎、蓋委員惠珍、趙委員福杉、劉委員杰柟、劉委員煥彩、鄭委員宗記、韓委員德生、簡委員文仁、中華民國老人福利推動聯盟、中華民國老人福祉協會、中華民國消費者文教基金會、中華民國脊髓損傷者聯合會、台北市美國商會醫療器材委員會、台北榮民總醫院身障重建中心、台灣福康輔具租賃股份有限公司、台灣障礙者權益促進會、台灣醫療暨生技器材工業同業公會、本局第三組、本局第六組、行政院消費者保護處、行政院衛生福利部、社團法人中華民國身心障礙聯盟、科技部、財團法人自行車暨健康科技工業研究發展中心、財團法人金屬工業研究發展中心、財團法人鞋類暨運動休閒科技研發中心、經濟部工業局、經濟部技術處、衛生福利部社會及家庭署、衛生福利部社會及家庭署多功能輔具資源整合推廣中心、衛生福利部食品藥物管理署

副本：

經濟部標準檢驗局第一組

裝

訂

線

CNS 草-修 1051246「輪椅－第 4 部：電動輪椅及代步車之耗能－測定理論行駛距離」、CNS 草-修 1051247「輪椅－第 10 部：電動輪椅越障能力試驗」國家標準草案審查意見書

此致　　經濟部標準檢驗局　第一組第四科吳啟瑞　　共　頁第　頁

草案編號	節　次	審　查　意　見
	編修說明： 1. CNS 草-修 1051246 為與國際標準調和，及提高國內廠商之競爭力與保障消費者權益，依據最新版之 ISO 7176-4:2008 修訂國家標準。本草案係由本局第六組委請財團法人自行車暨健康科技工業研究發展中心依 ISO 7176-4:2008 研擬而成。 2. CNS 草-修 1051247 為與國際標準調和，及提高國內廠商之競爭力與保障消費者權益，依據最新版之 ISO 7176-10:2008 修訂國家標準。本草案係由本局第六組委請財團法人自行車暨健康科技工業研究發展中心依 ISO 7176-10:2008 研擬而成。	
技術性貿易障礙調查	進口國家：　　發生時間：	
	原因：□1.進口國檢驗措施不夠透明化，致無法取得相關資料； □2.進口國檢驗標準不合理或檢驗措施對我有不平等待遇； □3.台灣無試驗室可做測試；或 □4.其他：＿＿＿＿＿＿ 情況簡述：＿＿＿＿＿＿	

審查委員或單位簽名（請務必填寫）：

文號：經標一字第 1051001936 號、106 年 3 月 5 日截止（請不必備文，本表若不敷使用，請自行影印）、倘需各標準草案或意見書空白表電子檔，請以 E-mail(jerrycr.wu@bsmi.gov.tw)來函索取。

標準檢驗局承辦人：吳啟瑞

ICS 11.180.10

草-修 1051246

中華民國國家標準

CNS

輪椅－第 4 部：電動輪椅及代步車之耗能－測定理論行駛距離

Wheelchairs Part 4: Energy consumption of electric wheelchairs and scooters for determination of theoretical distance range

CNS 14764-4:2016
T5022-4

中華民國 96 年 10 月 12 日制定公布
Date of Promulgation:2007-10-12

本標準非經經濟部標準檢驗局同意不得翻印

目錄

節次 頁次
前言 2
簡介 2
1. 適用範圍 3
2. 引用標準 3
3. 名詞釋義 3
4. 原理 3
5. 試驗設備 3
5.1 試驗跑道 3
5.2 耗能計(energy consumption measurement apparatus) 4
5.3 距離量測裝置(distance measurement apparatus) 4
6. 準備 5
7. 試驗程序 5
7.1 連續行駛試驗 5
7.2 操控行駛試驗 7
8. 試驗報告 8
9. 宣告 8
附錄 A (參考)耗能 9
名詞對照 10

(共 10 頁)

前言

本標準係依據 2008 年發行之 ISO 7176-4，不變更技術內容及其標準程式，制定成為中華民國國家標準者。

本標準依標準法之規定，經國家標準審查委員會審定，由主管機關公布之中華民國國家標準。CNS 14964-4:2007 已被廢止並由本標準取代。

本標準係依標準法之規定，經國家標準審查委員會審定，由主管機關公布之中華民國國家標準。

依標準法第四條之規定，國家標準採自願性方式實施。但經各該目的事業主管機關引用全部或部分內容為法規者，從其規定。

本標準並未建議所有安全事項，使用本標準前應適當建立相關維護安全與健康作業，並且遵守相關法規之規定。

本標準之部分內容，可能涉及專利權、商標權與著作權，主管機關及標準專責機關不負責任何或所有此類專利權、商標權與著作權之鑑別。

簡介

電動輪椅行駛距離受耗能與電池條件所影響。耗能受環境溫度、總重、使用者重量分佈、地形、表面特徵與輪胎等因素所影響。電池條件受溫度、老化、充、放電次數等因素所影響。因此，本標準所規定之試驗結果無法作為推算特定輪椅與使用者精準距離之用。然而，本試驗之結果可作為不同的輪椅在類似試驗條件下所測得結果之比較。行駛距離亦與輪椅驅動方式有很大之關連性，單一理論距離值不足以瞭解輪椅之性能。本標準規定連續行駛與操控行駛二種試驗方法用以測定理論行駛距離。此值可作為類似電動車輛於市區內、外耗能比較之方法。

1. 適用範圍

本標準規定電動輪椅(包括代步車)利用電池組之標稱容量及量測行駛時之耗能來決定理論行駛距離之方法。

本標準適用於依 CNS 14964-11 規定之最大使用者質量及最大標稱速率不超過 15 km/h，且僅供一位身障者乘坐於室內及/或室外移動使用之電動輪椅(包括代步車)。

本標準亦包含試驗報告與資訊宣告之要求。

2. 引用標準

下列標準因本標準所引用，成為本標準之一部分。下列引用標準適用最新版(包括補充增修)。

CNS 13575-1　輪椅–專有名詞、術語及定義

CNS 14964-11　輪椅–第 11 部：測試用假人

CNS 14964-15　輪椅–第 15 部：資訊宣告、文件與標示之要求

CNS 14964-22　輪椅–第 22 部：設定程序

3. 名詞釋義

除 CNS 13575-1 外，下列用語及定義適用於本標準。

3.1 電動輪椅

電力驅動之輪椅。

備考：代步車亦為一種電力驅動之輪椅。

4. 原理

利用連續行駛(continuous driving)與操控行駛(manoeuvring driving)二種驅動方式進行量測耗能。

連續行駛為利用輪椅於試驗跑道上順時針與逆時針各繞行 10 圈後，量測所消耗之能量。

操控行駛為於二個相距 5 m 的記號間，驅動輪椅以 8 字形行駛，行駛接近記號時停止並再從其外側繞行通過，每個方向各 10 圈後，量測其所消耗之能量。

理論行駛距離利用其所消耗之能量、標稱行駛距離與電池容量計算而得。

操控行駛，輪椅總耗能包括輪椅在二記號間與二記號外之耗能。計算理論操控行駛距離是使用二記號間之標稱行駛距離來計算，行駛記號外之距離則忽略之。此意味操控性佳之輪椅其理論行駛距離較操控性差之輪椅長。

5. 試驗設備

5.1 試驗跑道

無風，溫度於 18 ℃至 25 ℃間，已作記號之平坦堅硬水平表面，參照圖 1。

試驗跑道中心線長度應介於 50 m 至 100 m 間，其每一長邊長度 L 應可使輪椅達到最大速率；每一短邊長度 W 應可使輪椅轉彎時無需停止。

備考 1.在此規定長度範圍內之跑道，使用較短之試驗跑道試驗時，將會得到較小之理論行駛距離。

備考 2. 面積足夠大且有水泥、瀝青或木質地板的廠房空間均可用於本項試驗。起點與終點在同一位置，順、逆時針各行駛 10 圈，以調和跑道因稍不平坦或水平所造成之小偏差。

試驗跑道上應包含二條垂直試驗跑道中心線且相距 5.00 m±0.01 m 的直線，在中心線距此二直線中點 0.03 m 內，有一個直徑 0.13 m±0.03 m 的中心記號(參照圖 1 與圖 2)。

試驗跑道較佳寬度為 2.0 m±0.1 m，跑道任一寬度應不大於 2.1 m。影響試驗結果的區域(如二記號間)不應小於 1.9 m，或任何點之寬度應不小於 1.2 m。

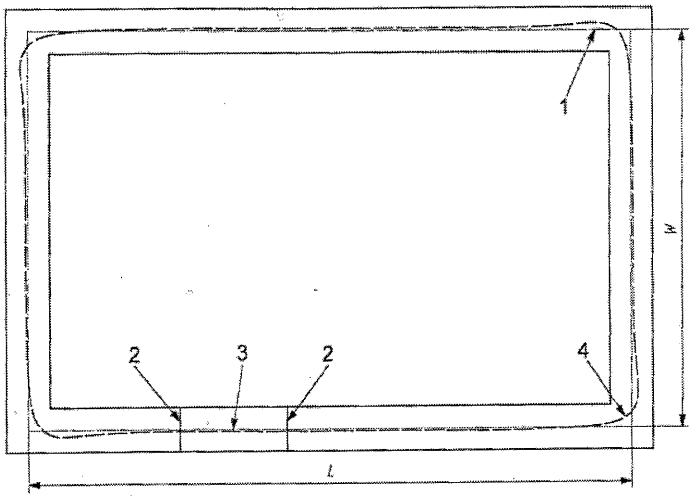

說明

1 跑道中心線

2 記號線

3 中心記號

4 輪椅行進軌跡之範例(逆時針)

L 跑道長邊之長度

W 跑道短邊之長度

備考：記號 2 與 3 可在跑道方便執行操控行駛之任意位置。

圖 1 試驗跑道

5.2 耗能計(energy consumption measurement apparatus)

用以量測輪椅電池組端點供給之電能(以 Ah 表示)，許可差為±2 %及其用電不應超過輪椅供電之 0.5 %。量測正值表示電池組供電給輪椅；負值表示從輪椅回充到電池組。當耗能計間隔取樣時，其取樣率不應超過所需許可差，如 100 ms。

為使分析簡單化，建議裝置可以加總輪椅全程之耗能。附錄 A 提供耗能計之指引。

5.3 距離量測裝置(distance measurement apparatus)

用以量測跑道中心線長度，其量測許可差為±100 mm。

6. 準備

(a) 依 CNS 14964-22 設定輪椅。

(b) 若輪椅裝有可供使用者調整設定之控制器，則將每一個設定調到可達到最大速率及/或加速率之設定。

(c) 使用下述方法之一配重與控制輪椅。

(1) 真人駕駛，其質量加上配重(若需要)應符合 CNS 14964-22 所選定假人及其固定之要求。

(2) 依 CNS 14964-22 選定假人及固定，使用自動裝置或遙控方式驅動輪椅。

若使用真人駕駛，確保質心(含配重)前、後方向位置在如同使用假人之質心位置 50 mm 以內，左、右方向位置在座椅中心 50 mm 內。

若使用假人，確保負載總質量(含外加之控制裝置)及質心位置應符合 CNS 14964-11 相對應假人之要求。

備考： 如沙包或類似東西之配重，可加至真人駕駛的身體支撐系統，並調整質心位置至正確的位置，調整輪椅加上坐定在座位上的真人(含配重，若有)的重量分佈與 CNS 14964-22 規定之假人身體支撐系統重量相當。

(d) 使用距離量測裝置(5.3)量測跑道中心線長度至最接近的 0.1 m。

(e) 使用可以達到所需許可差之方法，連接耗能計(5.2)至電池組端點。

(f) 於環境溫度 18 ℃至 25 ℃，依製造商操作手冊將電池組充飽電。

(g) 試驗前，將輪椅恆溫在 18 ℃至 25 ℃間，至少 8 h。

備考：恆溫與電池組充電可同時進行。

(h) 完成(g)後，儘速使輪椅能保持在試驗跑道內的實際可能最大速率，順時針行駛 10 圈後，再逆時針行駛 10 圈，然後在起始點 2 m 內使輪椅停下來，使輪椅驅動系統得以溫機。記錄此溫機所行駛 20 圈之耗能，並將耗能計歸零。

在執行此試驗之前，建議可以實際練習操控技巧，使在正式試驗時得以順利進行。

7. 試驗程序

7.1 連續行駛試驗

(a) 完成第 6 節規定之準備後，立即驅動輪椅得以使輪椅保持在試驗跑道內的實際可能最大速率順時針或逆時針行駛 10 圈，行駛中儘可能保持在跑道內；使用耗能計(5.2)測量行進間輪椅之耗能，輪椅停止時須停在起始點 2 m 範圍內。試驗期間，若因輪椅電池電力耗竭而使試驗停止時，則量測並記錄已行駛總距離包含 6(h)所行駛之距離。

備考： 已行駛距離為輪椅行駛完整圈數乘以跑道中心線長度，加上額外不完整一圈的中心線距離。

(b) 若輪椅未因電池組電力耗竭而停止，則重複(a)，但以反方向繞行試驗跑道。

(c) 依下述記錄輪椅總耗能(以 Wh 表示)

－ 若輪椅完成(a)與(b)，則記錄(a)與(b)之總耗能。

－ 若輪椅因電力耗竭而停止，則記錄總耗能(包含溫機所行駛之耗能)。

(d) 依下式計算比耗能(specific energy consumption, e_c)

$$e_c = \frac{1000 \times E_c}{D_c}$$

式中， e_c ：輪椅連續行駛之比耗能(Wh/km)。

E_c ：連續行駛試驗期間之耗能(Wh)。

D_c ：跑道中心線 20 倍之長度或在(a)中輪椅試驗停止時所行駛之距離(m)。

例：在 89.1 m 長之跑道行駛 20 圈共消耗 44.25 Wh，

則 $e_c = \frac{1000 \times 44.25}{20 \times 89.1} = 24.8\ \text{Wh/km}$

(e) 依下式計算理論行駛距離(R_c)

$$R_c = \frac{E_{BAT}}{e_c}$$

式中， R_c ：輪椅理論連續行駛距離(km)。

E_{BAT} ：輪椅電池組之標稱容量(Wh)。

例：一比耗能為 24.8 Wh/km 與電池組標稱容量 1,020 Wh，則 R_c=1,020/24.8=41.1 km。

若電池製造商宣稱標稱容量 E_{BAT} 為每一個電池 5 h 放電率之標稱容量，乘上輪椅所使用的電池個數即為輪椅之耗能；若容量非用 5 h 放電率做宣稱，則使用最接近但較短期間之容量。

否則，依下式計算 E_{BAT}

$$E_{BAT} = V_{NOM} \times C_5$$

式中，V_{NOM} ：電池組標稱電壓(V)。

C_5 ：電池製造商宣稱 5 h 放電率之電池容量(Ah)。

備考： 此公式為典型輪椅電池之標稱容量(nominal energy capacity)與標稱放電容量(nominal charge capacity)間之估算關係，最好還是由製造商宣稱其標稱容量。

若電池製造商宣稱之電池容量非 5 h 放電率所得，則依下式計算 5 h 放電率容量

$$C_5 = 0.80 \times C_{20}$$

式中，C_{20}：電池製造商宣稱 20 h 放電率之電池容量(Ah)。

備考：此為典型輪椅電池估算 C_5 與 C_{20} 之關係式。

7.2 操控行駛試驗

(a) 若電池組需重新充電或 7.1 連續行駛試驗與本試驗開始之間的時間超過 5 min 時，則依第 6 節規定重新準備輪椅。

例： 若輪椅可能因電力耗竭而在操縱行駛試驗中停止或減速，則電池需要重新充電。

(b) 將輪椅置於試驗跑道上，前輪接觸其中一條垂直跑道中心線之記號線，且面對另一 5 m 遠之記號線，重新將耗能計歸零。

(c) 驅動輪椅儘可能以最大速率，約略以直線前進通過中心記號，直到任一前輪接觸到另一記號線後迅速放開控制器，當行駛於二記號線間時，確保輪椅不會駛離試驗跑道。

(d) 當輪椅停止後，再驅動輪椅不要停止以最短距離將輪椅迴轉面向原來的記號線。迴轉時，輪椅可能會部分或完全駛離到跑道外面，參照圖 2。

(e) 利用與(c)相同的方法，將輪椅駛回第一條記號線處。

(f) 與(d)相同之方法但方向相反，將輪椅迴轉，面對第二條記號線。

備考：此方法行駛將形成如圖 2 所示之 8 字形行進軌跡。

(g) 重複(c)至(f)共 10 次後，量測輪椅總消耗能量。

(h) 記錄輪椅總消耗能量(Wh)。

(i) 利用下式計算比耗能(e_M)

$$e_M = 10\ E_M$$

式中，e_M ：輪椅操控比耗能(Wh/km)。

E_M ：輪椅操控行駛試驗之耗能(Wh)。

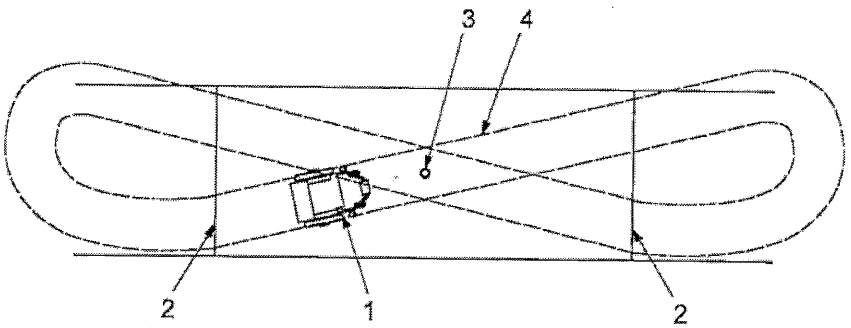

說明

1 輪椅

2 直線記號

3 中心記號

4 輪椅行駛軌跡(範例)

圖 2 操縱行駛試驗

(j) 依下式計算理論行駛距離(R_M)

$$R_M = \frac{E_{BAT}}{e_M}$$

式中，R_M：輪椅理論操控行駛距離(km)。

8. 試驗報告

試驗報告應包含下述資訊。

(a) 試驗機構名稱與地址。

(b) 依本標準完成試驗之聲明。

(c) 輪椅製造商之名稱與地址。

(d) 輪椅型號。

(e) 輪椅序號或批號。

(f) 於第 6 節(b)有關控制器任何調整之詳細說明。

(g) 所使用假人或試驗者(含配重，若有)之質量。

(h) 試驗跑道每一邊中心線之長度(m)。

(i) 在 7.1 連續行駛試驗與 7.2 操控行駛試驗中輪椅比耗能(Wh/km)，有效位數 2 位。

(j) 電池種類、標稱容量與電池製造商宣稱容量之放電時間或依 7.1 計算所得之容量。

(k) 分別依 7.1 與 7.2 計算所得之輪椅理論連續行駛距離與理論操控行駛距離(km)。

(l) 試驗報告之唯一編號。

9. 宣告

輪椅製造商應依 CNS 14964-15 規格表中宣告 7.1 理論連續行駛距離與 7.2 理論操控行駛距離(km)之訊息，有效位數 2 位。

附錄 A
(參考)
耗能

電動車輛之比耗能通常以 Wh/km 表示。

距離可利用比耗能與車輛電池組的容量計算得到。

輪椅耗能可利用電池功率對時間之積分得到；在短時間間隔內之電池功率可利用電池電流乘上電池電壓得到。放電期間，電池電壓大約在標稱電壓的±10 %內變化。取樣率會影響功率量測的精度，因此要求取樣率是有其必要的。

典型的耗能計是在固定的時間間隔內量測電壓(V)與電流(A)，再計算電壓(V)、電流(A)與時間間隔(h)三者乘積即得能量(Wh)。

一適當的耗能計是利用電流計與電壓計，在一定的小時間間隔去同時量測電壓與電流，再將同一時間量測到電壓乘以電流與時間間隔即得能量，再將所有時間的能量加總起來即得到總能量(Wh)。

為了比較，若無宣稱的狀況下，因標稱電壓大約等於定電流放電期間的平均電壓，因此電池容量(Wh)可利用標稱放電容量(Ah)與標稱電壓(V)的乘積計算得到。

名詞對照

C	
continuous driving	連續行駛
D	
distance measurement apparatus	距離量測裝置
E	
energy consumption measurement apparatus	耗能計
M	
manoeuvring driving	操控行駛
N	
nominal charge capacity	標稱放電容量
nominal energy capacity	標稱容量
S	
specific energy consumption	比耗能，能量消耗率

相對應國際標準

ISO-7176-04 2008 Energy consumption of electric wheelchairs and scooters for determination of theoretical distance range

修訂說明：因應 2015 年版 ISO 9001 標準之改訂及發展趨勢，修訂 CNS 12681 國家標準，以協助國內業者提升品質管理水準，順應國際發展趨勢，本修訂草案係參考 ISO/DIS 9001:2014 資料編擬而成。

ICS 11.180.10

草-修 1051247

中華民國國家標準

CNS

輪椅－第 10 部：電動輪椅越障能力試驗

Wheelchairs – Part 10 : Determination of obstacle-climbing ability of electric wheelchairs

CNS 14764-10:2016
T5022-10

中華民國 95 年 2 月 24 日制定公布
Date of Promulgation:2006-02-24

本標準非經經濟部標準檢驗局同意不得翻印

目錄

節次 頁次
前言 2
1. 適用範圍 3
2. 引用標準 3
3. 用語釋義 3
4. 原則 3
5. 試驗設備 3
5.1 試驗平面(test plane) 3
5.2 試驗障礙物(test obstacle) 3
6. 準備 4
7. 試驗程序 5
8. 試驗報告 6
9. 宣告 7
名詞對照 8

(共 8 頁)

前言

本標準係依據 2008 年發行之 ISO 7176-10，不變更技術內容及其標準程式，制定成為中華民國國家標準者。

本標準依標準法之規定，經國家標準審查委員會審定，由主管機關公布之中華民國國家標準。CNS 14964-10:2006 已被廢止並由本標準取代。

本標準係依標準法之規定，經國家標準審查委員會審定，由主管機關公布之中華民國國家標準。

依標準法第四條之規定，國家標準採自願性方式實施。但經各該目的事業主管機關引用全部或部分內容為法規者，從其規定。

本標準並未建議所有安全事項，使用本標準前應適當建立相關維護安全與健康作業，並且遵守相關法規之規定。

本標準之部分內容，可能涉及專利權、商標權與著作權，主管機關及標準專責機關不負責任何或所有此類專利權、商標權與著作權之鑑別。

1. 適用範圍

本標準規定預期單人乘坐，最大標稱速率不超過 15 km/h 之電動輪椅包含代步車上、下障礙物之試驗方法。

2. 引用標準

下列標準因本標準所引用，成為本標準之一部分。下列引用標準適用最新版(包括補充增修)。

CNS 13575-1　輪椅–專有名詞、術語及定義

CNS 14964-11　輪椅–第 11 部：測試用假人

CNS 14964-13　輪椅–第 13 部：測試表面摩擦係數之測定

CNS 14964-15　輪椅–第 15 部：資訊宣告、文件與標示之要求

CNS 14964-22　輪椅–第 22 部：設定程序

3. 用語釋義

參照 CNS 13575-1。

4. 原則

以多次試驗決定電動輪椅通過障礙物如邊石或階梯之能力。

5. 試驗設備

5.1 試驗平面(test plane)

堅硬平整表面，其應位於相距 5 mm 之二假想平行水平面內且與水平之夾角在±0.5°內，其表面摩擦係數須符合 CNS 14964-13 要求。

備考：足以容納輪椅與距輪椅前方 0.5 m 試驗障礙物(5.2)之試驗平面即足夠。

5.2 試驗障礙物(test obstacle)

為四方形平板其可改變高度，每一增量為 5 mm 至最大高度 200 mm，參照圖 1，相對許可差 5 %或許可差± 2 mm，取其大者。一般起始高度應為 10 mm 或由試驗實驗室與輪椅供應商雙方同意之 5 mm 倍數之高度。

如：起始高度可為 50 mm。

備考：可使用可連續調整高度之試驗障礙物。

障礙物面積應大到可讓試驗輪椅爬上後所有輪子均可停在其上，且大到輪椅可置於如 7.5(b)所述之障礙物之上。

最上層障礙物前緣應平滑且為圓角，其半徑 r 為 3^{+2}_{0} mm，參照圖 1。障礙物前平面(不含頂部圓角)應位於相距 4 mm 之二平行垂直平面間，障礙物前平面與上平面夾角應為 90°±1°。

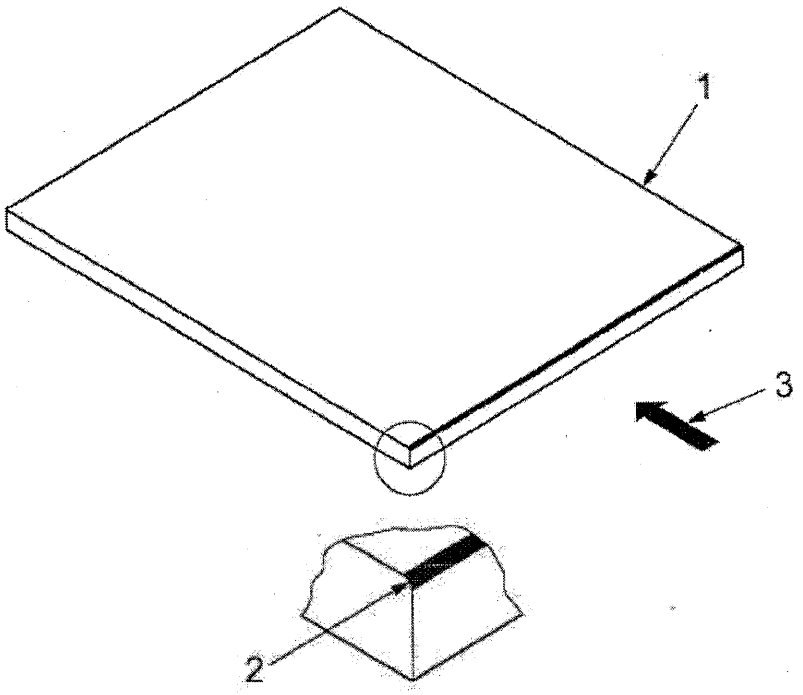

說明

1 試驗障礙物

2 上前緣圓角 r

3 接近方向

圖 1　試驗用障礙物

與輪椅接觸之障礙物表面摩擦係數應符合 CNS 14964-13 要求。障礙物應固定在試驗平面上，以防止在試驗過程中移動。

6. 準備

依下述順序準備輪椅。

(a) 安裝依製造商規定之最大電池。

(b) 依 CNS 14964-22 設定輪椅。

依下述方法之一對輪椅施加負載。

(1) 依 CNS 14964-11 選擇適當之試驗用假人並依 CNS 14964-22 規定固定。

(2) 使用真人試驗者其與(1)規定之假人總質量相同($^{+2}_{0}$kg)，且其質量平均分布於輪椅身體支撐系統。

若使用真人進行試驗，應採取適當措施以保護試驗人員安全。

(c) 若可行，除輪子與製造商預期作為爬障礙物之裝置外，調整所有可能會與障礙物接觸之零件，以避免試驗時先撞到障礙物。

如：足支撐(foot support)。

(d) 量測並記錄足支撐最低部位高於試驗平面之高度，許可差±1 mm。

(e) 若可行，設定防傾裝置防止試驗期間與試驗平面及障礙物接觸，否則設定在最

高位置。

備考：此不包含移除防傾裝置。

(f) 若為製造商預期作為上、下障礙物之裝置，依製造商手冊設定以進行試驗。如：階石爬升器(kerb climber)。

7. 試驗程序

警語：以下試驗可能具危險性，應採取適當措施以保護試驗人員安全。

7.1 依下述試驗順序執行試驗。

(a) 依 5.2 設定障礙物起始高度。

(b) 將輪椅置於試驗平面上(面對上障礙物方向)與障礙物前緣保持 90°±5°，所有萬向輪調整至拖曳方向，輪椅與障礙物接觸。

(c) 操作控制器以最大速率指令，驅動輪椅爬上障礙物，待所有支撐輪爬上障礙物上表面後，立即釋放控制器。記錄除輪子與預期作為爬升障礙物裝置外，任何與障礙物接觸之部件。

(d) 依 5.2 增加一增量高度，重複(a)至(c)。

(e) 重複(d)直到輪椅無法爬上障礙物或顯現失控行為，如傾倒或控制器釋放後輪椅繼續加速。

(f) 記錄輪椅可以爬上障礙物之最大高度。

7.2 參照圖 2，設定助跑距離 500 mm±25 mm (障礙物與輪椅首先與障礙物接觸部位之水平距離)，重複 7.1。

單位：mm

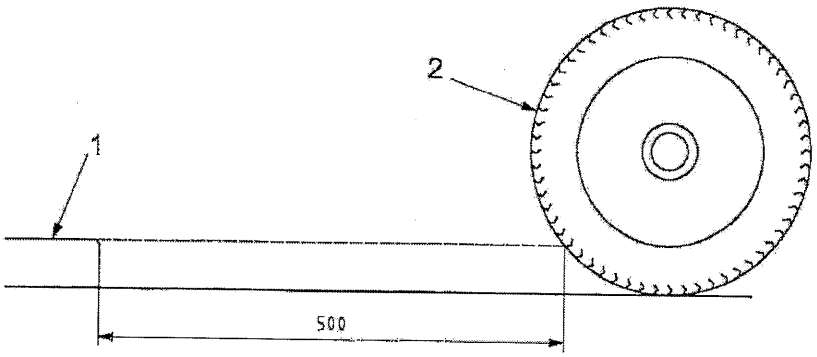

說明

1 試驗障礙物

2 首先與障礙物接觸之輪椅部件

備考：此以輪子為例。

圖 2 助跑之量測

7.3 背向上障礙物方向，重複 **7.1**。

7.4 依圖 2，設定助跑距離 500 mm±25 mm (障礙物與輪椅首先與障礙物接觸部位之水平距離)，重複 7.3。

7.5 依下述試驗順序執行試驗。

(a) 依 5.2 設定障礙物起始高度。

(b) 將輪椅置於障礙物上(面對下障礙物方向)，設定與障礙物最接近之支撐輪接觸點距離為 500 mm±25 mm，並與障礙物前緣保持(90±5)°，所有萬向輪調整至拖曳方向。

(c) 操作控制器以最大速率指令，驅動輪椅往前爬下障礙物，待所有支撐輪爬下障礙物及輪椅無任何部位與障礙物接觸後，立即釋放控制器。記錄除輪子與預期作為爬升障礙物裝置外，任何與障礙物接觸之部件。

(d) 依 5.2 增加一增量高度，重複(a)至(c)。

(e) 重複(d)直到輪椅無法爬下障礙物或顯現失控行為，如傾倒或控制器釋放後輪椅繼續加速。

(f) 記錄輪椅可以爬下障礙物之最大高度。

7.6 背向下障礙物方向，重複 7.5。

7.7 若使用手冊中有其他建議上、下障礙物之方法時，若適用依建議之方法重複 7.1 至 7.4 或 7.5 與 7.6。

若使用手冊中，製造商建議之設定與 7.1 至 7.6 不同時，則依製造商之建議。

如 可能包含可選用之技術。

－ 輪椅可設定較慢之爬行速率。

－ 使用不同之接近角度與助跑距離。

－ 可改變使用者或介護者可調整之控制器設定。

7.8 若適用時，若製造商配置預期作為上、下障礙物裝置可以設定至失效時，若適用將其設定至失效重複 7.1 至 7.4 及/或 7.5 與 7.6。

7.9 若輪椅有超過一個以上會影響上、下障礙物能力之操作模式時，每一個操作模式重複 7.1 至 7.8。

如：四輪驅動模式、室內模式、室外模式及站立模式。

8. 試驗報告

試驗報告應包含下述資訊。

(a) 依本標準進行試驗。

(b) 試驗機構名稱與地址。

(c) 試驗機構之認證。

(d) 輪椅製造商名稱與地址。

(e) 試驗報告發佈日期。

(f) 輪椅型式、序號及/或批號。

(g) 試驗用假人質量或真人駕駛與配重之總質量。

(h) 輪椅依 CNS 14964-22 之設定細節。

(i) 試驗期間，輪椅配置之照片。

(j) 7.1 至 7.9 之試驗結果。

(k) 若配置製造商預期作為上及/或下障礙物之裝置。

(l) 足支撐最低點距地面之高度。

(m) 任何製造商建議上及/或下障礙物之方法細節及 7.8 之試驗結果。

(n) 所有操作模式之 7.9 試驗結果。

9. 宣告

應依 CNS 14964-15 規定之格式，將下述試驗結果揭露於製造商規格表中。

(a) 可以爬上及爬下障礙物最大參考操作高度_____mm。

備考：此為依 7.1 至 7.6 試驗結果之最小值。

(b) 依製造商建議操作可以爬上與爬下障礙物之最大高度_____mm。

備考：此為依 7.7 至 7.9 試驗結果之最小值。

名詞對照

F	
foot support	足支撐
K	
kerb climber	階石爬升器
T	
test obstacle	試驗障礙物
test plane	試驗平面

相對應國際標準

ISO 7176-10:2008 Wheelchairs – Part 10: Determination of obstacle-climbing ability of electric wheelchairs

修訂說明：因應 2015 年版 ISO 9001 標準之改訂及發展趨勢，修訂 CNS 12681 國家標準，以協助國內業者提升品質管理水準，順應國際發展趨勢，本修訂草案係參考 ISO/DIS 9001:2014 資料編擬而成。

INTERNATIONAL STANDARD

ISO 7176-4

Third edition
2008-10-01

Wheelchairs —

Part 4:
Energy consumption of electric wheelchairs and scooters for determination of theoretical distance range

Fauteuils roulants —

Partie 4: Consommation d'énergie des fauteuils roulants et des scooters électriques pour la détermination de la distance théorique

標準檢驗局
內部公務使用

經濟部標準檢驗局
97. 10. -9
資料中心

Reference number
ISO 7176-4:2008(E)

© ISO 2008

PDF disclaimer

This PDF file may contain embedded typefaces. In accordance with Adobe's licensing policy, this file may be printed or viewed but shall not be edited unless the typefaces which are embedded are licensed to and installed on the computer performing the editing. In downloading this file, parties accept therein the responsibility of not infringing Adobe's licensing policy. The ISO Central Secretariat accepts no liability in this area.

Adobe is a trademark of Adobe Systems Incorporated.

Details of the software products used to create this PDF file can be found in the General Info relative to the file; the PDF-creation parameters were optimized for printing. Every care has been taken to ensure that the file is suitable for use by ISO member bodies. In the unlikely event that a problem relating to it is found, please inform the Central Secretariat at the address given below.

標準檢驗局
內部公務使用

COPYRIGHT PROTECTED DOCUMENT

© ISO 2008

All rights reserved. Unless otherwise specified, no part of this publication may be reproduced or utilized in any form or by any means, electronic or mechanical, including photocopying and microfilm, without permission in writing from either ISO at the address below or ISO's member body in the country of the requester.

ISO copyright office
Case postale 56 • CH-1211 Geneva 20
Tel. + 41 22 749 01 11
Fax + 41 22 749 09 47
E-mail copyright@iso.org
Web www.iso.org

Published in Switzerland

© ISO 2008 – All rights reserved

Contents

Page

Foreword iv
Introduction vi
1 Scope 1
2 Normative references 1
3 Terms and definitions 1
4 Principle 1
5 Test equipment 2
6 Preparation 3
7 Test procedure 4
8 Test report 7
9 Disclosure 8
Annex A (informative) Energy consumption 9

標準檢驗局
內部公務使用

© ISO 2008 – All rights reserved

標準檢驗局
內部公務使用

Foreword

ISO (the International Organization for Standardization) is a worldwide federation of national standards bodies (ISO member bodies). The work of preparing International Standards is normally carried out through ISO technical committees. Each member body interested in a subject for which a technical committee has been established has the right to be represented on that committee. International organizations, governmental and non-governmental, in liaison with ISO, also take part in the work. ISO collaborates closely with the International Electrotechnical Commission (IEC) on all matters of electrotechnical standardization.

International Standards are drafted in accordance with the rules given in the ISO/IEC Directives, Part 2.

The main task of technical committees is to prepare International Standards. Draft International Standards adopted by the technical committees are circulated to the member bodies for voting. Publication as an International Standard requires approval by at least 75 % of the member bodies casting a vote.

Attention is drawn to the possibility that some of the elements of this document may be the subject of patent rights. ISO shall not be held responsible for identifying any or all such patent rights.

ISO 7176-4 was prepared by Technical Committee ISO/TC 173, *Assistive products for persons with disability*, Subcommittee SC 1, *Wheelchairs*.

This third edition cancels and replaces the second edition (ISO 7176-4:1997), which has been technically revised.

ISO 7176 consists of the following parts, under the general title *Wheelchairs*:

— *Part 1: Determination of static stability*

— *Part 2: Determination of dynamic stability of electric wheelchairs*

— *Part 3: Determination of effectiveness of brakes*

— *Part 4: Energy consumption of electric wheelchairs and scooters for determination of theoretical distance range*

— *Part 5: Determination of dimensions, mass and manoeuvring space*

— *Part 6: Determination of maximum speed, acceleration and deceleration of electric wheelchairs*

— *Part 7: Measurement of seating and wheel dimensions*

— *Part 8: Requirements and test methods for static, impact and fatigue strengths*

— *Part 9: Climatic tests for electric wheelchairs*

— *Part 10: Determination of obstacle-climbing ability of electric wheelchairs*

— *Part 11: Test dummies*

— *Part 13: Determination of coefficient of friction of test surfaces*

— *Part 14: Power and control systems for electrically powered wheelchairs and scooters — Requirements and test methods*

© ISO 2008 – All rights reserved

— *Part 15: Requirements for information disclosure, documentation and labelling*

— *Part 16: Resistance to ignition of upholstered parts — Requirements and test methods*

— *Part 19: Wheeled mobility devices for use as seats in motor vehicles*

— *Part 21: Requirements and test methods for electromagnetic compatibility of electrically powered wheelchairs and motorized scooters*

— *Part 22: Set-up procedures*

— *Part 23: Requirements and test methods for attendant-operated stair-climbing devices*

— *Part 24: Requirements and test methods for user-operated stair-climbing devices*

— *Part 26: Vocabulary*

標準檢驗局
內部公務使用

© ISO 2008 – All rights reserved

Introduction

The distance range of an electrically powered wheelchair is affected by energy consumption and battery condition. Energy consumption is affected by a number of factors such as ambient temperature, total weight and weight distribution of the occupant, topography, surface characteristics and tyres. Battery condition is affected by factors such as temperature, age, charging history and discharging history. Hence the result obtained from the tests specified in this part of ISO 7176 cannot be used to derive an accurate range estimate for a particular wheelchair and occupant. However, it can be used to give a basis for comparison between different wheelchairs under similar test conditions.

Distance range is also strongly dependent on the way in which a wheelchair is driven, and a single value for theoretical range can be insufficient to provide an understanding of the performance of a wheelchair. Two methods for determining theoretical range are provided in this part of ISO 7176, for driving and for manoeuvring. These values are intended to facilitate wheelchair comparison in a manner analogous to the extra-urban and urban fuel consumption figures published for motor vehicles.

標準檢驗局
內部公務使用

© ISO 2008 – All rights reserved

標準檢驗局
內部公務使用

Wheelchairs —

Part 4: Energy consumption of electric wheelchairs and scooters for determination of theoretical distance range

1 Scope

This part of ISO 7176 specifies methods for determining the theoretical distance range of electrically powered wheelchairs, including scooters, using measurements of energy consumed while driving and the nominal energy capacity of the wheelchair's battery set. It is applicable to electrically powered wheelchairs with a maximum nominal speed no greater than 15 km/h, intended to provide indoor and/or outdoor mobility for one disabled person whose mass is within the range represented by ISO 7176-11. This part of ISO 7176 also includes requirements for test reports and information disclosure.

2 Normative references

The following referenced documents are indispensable for the application of this document. For dated references, only the edition cited applies. For undated references, the latest edition of the referenced document (including any amendments) applies.

ISO 7176-11, *Wheelchairs — Part 11: Test dummies*

ISO 7176-15, *Wheelchairs — Part 15: Requirements for information disclosure, documentation and labelling*

ISO 7176-22, *Wheelchairs — Part 22: Set-up procedures*

ISO 7176-26, *Wheelchairs — Part 26: Vocabulary*

3 Terms and definitions

For the purposes of this document, the terms and definitions given in ISO 7176-26 and the following apply.

3.1
wheelchair
electrically powered wheelchair

NOTE A scooter is an electrically powered wheelchair.

4 Principle

Energy consumption is measured for two types of driving: continuous driving and manoeuvring. For continuous driving, the wheelchair is driven around a test track ten times clockwise and ten times anti-clockwise, and the energy consumed is measured. For manoeuvring, the wheelchair is driven in a circuit between two markers 5 m apart, stopping and turning outside them, ten times in each direction while the energy consumed is measured. Theoretical range values are calculated from the energy consumed, the nominal distance travelled, and the battery capacity.

© ISO 2008 – All rights reserved

In the manoeuvring test, the total energy consumed by the wheelchair is measured, including both the energy consumed while it is between the markers and the energy consumed while it is outside them. However, the distance used to calculate the theoretical manoeuvring range is the nominal distance travelled between the markers; the distance travelled outside them is ignored. This implies that more-manoeuvrable wheelchairs will tend to have higher values of theoretical manoeuvring distance range than similar but less-manoeuvrable wheelchairs.

5 Test equipment

5.1 Test track, as shown in Figure 1, marked upon a flat, hard, horizontal surface in an area free from draughts, in a location where the temperature is between 18 °C and 25 °C.

The length of the centreline of the test track shall be between 50 m and 100 m. Each long side, L, shall be of sufficient length that the wheelchair can achieve its maximum speed. Each short side, W, shall be of sufficient length that the wheelchair can turn without stopping.

NOTE 1 The use of a shorter test track within the specified range will result in a lower theoretical range.

NOTE 2 The floor of a typical large building used for manufacturing or indoor leisure activities with, for example, a concrete, asphalt or wooden floor is acceptable. Any minor deviations from flat or horizontal are accommodated by reversing the direction of the test after the first ten laps, and starting and finishing the test in the same place on the track.

The test track shall contain two markers across one side, perpendicular to the centreline and 5,00 m ± 0,01 m apart. It shall also contain a circular central marker, of diameter 0,13 m ± 0,03 m, the centre of which shall be located within 0,03 m of a point half way between the two markers on the centreline of the test track (see Figures 1 and 2).

The preferred width of the test track is 2,0 m ± 0,1 m. No part of the track shall be wider than 2,1 m. The track shall not be narrower than 1,9 m in places where it would affect the performance of a test (e.g. the region containing the markers), or be narrower than 1,2 m at any point.

5.2 Energy consumption measurement apparatus, capable of measuring the electrical energy, expressed in watt hours, supplied by the terminals of the wheelchair's battery set, to an accuracy of ± 2 % and which does not itself use more than 0,5 % of the electrical energy supplied. A positive measurement shall represent energy supplied by the battery set to the wheelchair, while a negative measurement shall represent energy returned to the battery set by the wheelchair. Where the apparatus acquires discrete samples, the sampling period shall not be greater than that necessary to provide the required accuracy.

EXAMPLE 100 ms.

For simplicity of analysis it is recommended that the apparatus integrate the power consumption of the wheelchair over time. Annex A gives guidance on energy consumption measurement apparatus.

5.3 Distance measuring device, capable of measuring the length of the centreline of the test track to an accuracy of ± 100 mm.

標準檢驗局
內部公務使用

© ISO 2008 – All rights reserved

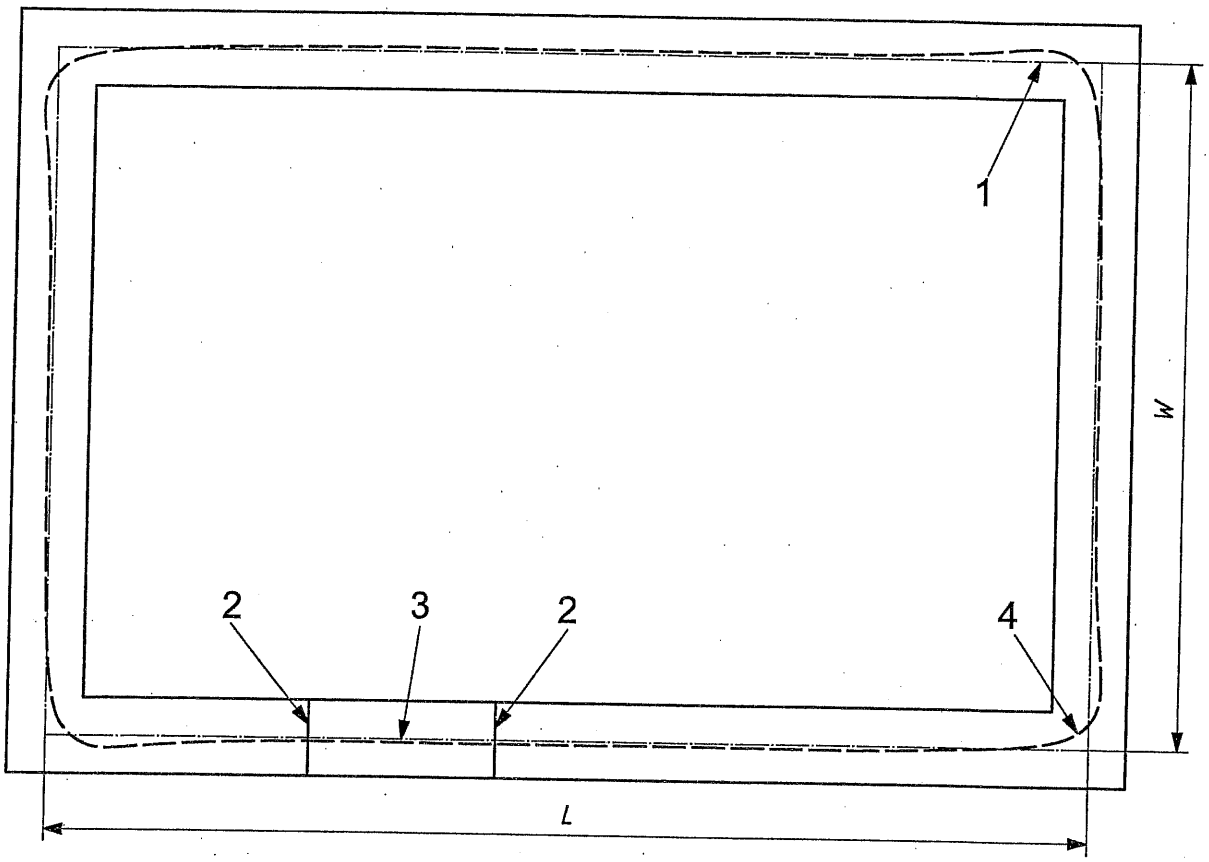

Key

1 centreline of test track
2 marker
3 centre marker
4 example of wheelchair path (when driving around the track in an anticlockwise direction)
L length of long sides of test track
W length of short sides of test track

NOTE The group of markers 2 and 3 is at any position along the track convenient for performing the manoeuvring test.

Figure 1 — Test track

6 Preparation

a) Set up the wheelchair as specified in ISO 7176-22.

b) If the wheelchair is fitted with a controller that has adjustable settings accessible to the operator by means provided with the wheelchair, set each of them to the value that provides the maximum magnitude of speed and/or acceleration.

c) Make provision for the wheelchair to be loaded and controlled using one of the following:

   1) a human test driver whose mass, when combined with weights if needed, conforms to the requirements for selection and fitting of dummies specified in ISO 7176-22;

   2) a dummy selected and fitted as specified in ISO 7176-22, together with means for the wheelchair to be driven automatically or by remote control.

標準檢驗局
內部公務使用

© ISO 2008 – All rights reserved

If a human test driver is used, ensure that the location of the centre of mass, including weights, is within 50 mm, in the fore-aft direction, of the position of the centre of mass for the corresponding dummy, and within 50 mm of the centre of the seat in the right-left direction.

If a dummy is used, ensure that the total mass of the load, including the additional control means, and the location of the centre of mass conform to the requirements of ISO 7176-11 for the applicable dummy mass.

NOTE Weights, such as sandbags or similar items, can be added to the body support system to supplement the mass of a human test driver and to adjust the location of the centre of mass. To determine the correct location of the centre of mass of a human driver, the weight distribution of the wheelchair with the seated driver (plus additional weights, if used) can be compared with the weight distribution of the wheelchair with the dummy fitted to the body support system as specified in ISO 7176-22.

d) Using the distance measuring device (5.3), measure the length of the centreline of the test track to the nearest multiple of 0,1 m.

e) Connect the energy consumption measurement apparatus (5.2) to the terminals of the battery set in a manner that will provide the required accuracy.

f) Fully charge the battery set in accordance with the manufacturer's instructions at an ambient temperature of between 18 °C and 25 °C.

g) Prior to the test, condition the wheelchair by maintaining it at a temperature between 18 °C and 25 °C for not less than 8 h.

NOTE Conditioning the wheelchair and charging the battery set can be done at the same time.

h) Immediately after completing g), to warm up the wheelchair drive system, drive the wheelchair around the test track ten times in the clockwise direction then ten times in the anticlockwise direction, at the maximum speed practicable while staying within the confines of the track. Stop the wheelchair within 2 m of the starting position. Record the energy consumed during the twenty warm-up laps, and then reset the energy consumption measurement apparatus.

Prior to conducting the tests, it is recommended that practise tests be conducted to enable test personnel to develop the driving skills needed to conduct the tests effectively.

標準檢驗局
內部公務使用

7 Test procedure

7.1 Continuous driving test

a) Immediately after completing the preparation specified in Clause 6, drive the wheelchair around the test track ten times, in either the clockwise or anti-clockwise direction, at the maximum speed practicable while staying within the confines of the track. Use the energy consumption measurement apparatus (5.2) to measure the electric energy consumed by the wheelchair while it is in motion. Stop the wheelchair within 2 m of the starting position.

If the wheelchair stops during the test due to a depleted battery set, measure and record the total distance it travelled, including the distance travelled in subclause 6 h).

NOTE The distance travelled is the number of whole laps the wheelchair travelled, multiplied by the length of the centreline of the track, plus any additional part of a lap it travelled, measured along the centreline of the track.

b) If the wheelchair did not stop in a) due to a depleted battery set, repeat a), but driving in the opposite direction around the track.

c) Record the total electrical energy consumed by the wheelchair, expressed in watt hours, as follows:

© ISO 2008 – All rights reserved

— if the wheelchair completed both a) and b), record the total electrical energy consumed in a) and b);

— if the wheelchair stopped due to a depleted battery set, record the total electrical energy consumed, including the energy consumed in the warm-up laps.

d) Calculate the specific energy consumption e_c using the following formula:

$$e_c = \frac{1\,000 \times E_c}{D_c}$$

where

e_c is the continuous driving specific energy consumption of the wheelchair, expressed in watt hours per kilometre;

E_c is the electrical energy consumed during the continuous driving test, expressed in watt hours;

D_c is twenty times the length of the centreline of the test track, or if the wheelchair stopped during the test, the distance recorded in a), expressed in metres.

EXAMPLE For an energy consumption of 44,25 Wh for twenty laps on a track of length 89,1 m, e_c would be recorded as 24,8 Wh/km.

e) Calculate the theoretical distance range R_c using the following formula:

$$R_c = \frac{E_{BAT}}{e_c}$$

標準檢驗局
內部公務使用

where

R_c is the theoretical continuous driving distance range of the wheelchair, expressed in kilometres;

E_{BAT} is the nominal energy capacity of the wheelchair's battery set, expressed in watt hours.

EXAMPLE For a specific energy consumption of 24,8 Wh/km and a total energy capacity of 1 020 Wh, R_c would be recorded as 41,1 km.

If the battery manufacturer declares the nominal energy capacity, then E_{BAT} is the nominal energy capacity of each battery, declared for a discharge time of 5 h, multiplied by the number of batteries used to power the wheelchair. If the energy capacity is not declared for a discharge time of 5 h, use the energy capacity declared for the nearest shorter period. Otherwise, calculate E_{BAT} using the following formula:

$$E_{BAT} = V_{NOM} \times C_5$$

where

V_{NOM} is the nominal voltage of the battery set, expressed in volts;

C_5 is the charge capacity of the battery for a discharge time of 5 h, as declared by the battery manufacturer, expressed in ampere hours.

NOTE This formula is an estimate of the relationship between nominal energy capacity and nominal charge capacity for typical wheelchair batteries. It is preferable that the battery manufacturer declare the nominal energy capacity.

© ISO 2008 – All rights reserved

If the battery manufacturer does not declare the charge capacity of the battery for a discharge time of 5 h, calculate C_5 using the following formula:

$$C_5 = 0{,}80 \times C_{20}$$

where C_{20} is the charge capacity of the battery for a discharge time of 20 h, as declared by the battery manufacturer, expressed in ampere hours.

NOTE This formula is an estimate of the relationship between C_5 and C_{20} for typical wheelchair batteries.

7.2 Manoeuvring test

a) Repeat the wheelchair preparation specified in Clause 6 if it is necessary to recharge the battery set or if more than 5 min elapses between the end of the continuous driving test specified in 7.1 and the start of this test.

EXAMPLE It would be necessary to recharge the battery set if the wheelchair were considered unlikely to complete the manoeuvring test without stopping or slowing down due to a depleted battery.

b) Place the wheelchair on the test track with a front wheel touching one of the markers and facing the other marker 5 m away. Reset the energy consumption measurement apparatus.

c) Drive the wheelchair in a substantially straight line at the maximum speed practicable so that it passes over the centre marker. Continue driving until one of its front wheels touches the opposite marker, and then immediately release the control device. Ensure that the wheelchair does not leave the test track while it is driven between the markers.

d) After the wheelchair stops, turn the wheelchair to face the first marker by driving it in the smallest practicable distance without stopping.

The wheelchair may be driven partially or completely outside the track to make the turn. See Figure 2.

e) Continue to drive the wheelchair back to the first marker in the same manner as in c).

f) Turn the wheelchair to face the second marker in the same manner as in d) but turning in the opposite direction.

NOTE This will result in a figure-of-eight driving circuit for the wheelchair as shown in Figure 2.

g) Repeat c) to f) for a total of ten complete circuits, while measuring the total electrical energy consumed by the wheelchair.

h) Record the total electrical energy consumed by the wheelchair, expressed in watt hours.

i) Calculate the specific energy consumption e_M using the following formula:

$$e_M = 10 \times E_M$$

標準檢驗局
內部公務使用

where

e_M is the manoeuvring specific energy consumption of the wheelchair, expressed in watt hours per kilometre;

E_M is the electrical energy consumed during the manoeuvring test, expressed in watt hours.

© ISO 2008 – All rights reserved

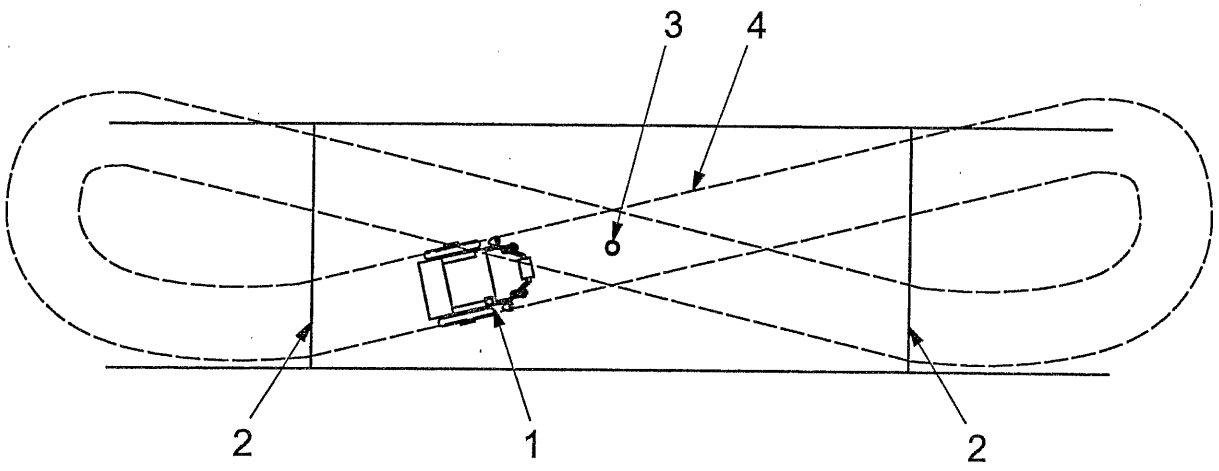

Key

1 wheelchair
2 marker
3 centre marker
4 example of wheelchair path

Figure 2 — Manoeuvring test

j) Calculate the theoretical distance range R_M using the following formula:

$$R_M = \frac{E_{BAT}}{e_M}$$

where R_M is the theoretical manoeuvring distance range of the wheelchair, expressed in kilometres.

8 Test report

The test report shall contain the following information:

a) the name and address of the testing institution;

b) a statement that the tests were carried out in accordance with ISO 7176-4;

c) the name and address of the wheelchair manufacturer;

d) the model designation of the wheelchair;

e) the serial number or batch number of the wheelchair;

f) details of any adjustments made to controller settings in 6 b);

g) the mass of the human test driver (and weights, if used) or the dummy used in the tests;

h) the length of each side of the test track measured at the centreline, expressed in metres;

i) the specific energy consumed by the wheelchair during the continuous driving test 7.1, and during the manoeuvring test 7.2, each expressed in watt hours per kilometre and rounded to two significant figures;

j) the battery type, nominal energy capacity and discharge time for which the capacity is specified, as declared by the battery manufacturer or as calculated in 7.1;

標準檢驗局
內部公務使用

© ISO 2008 – All rights reserved

k) the theoretical continuous driving distance range and the theoretical manoeuvring distance range of the wheelchair, as calculated in 7.1 and in 7.2 respectively, expressed in kilometres and rounded to two significant figures;

l) a unique test report reference.

9 Disclosure

Wheelchair manufacturers shall disclose in their specification sheet, in the manner and sequence specified in ISO 7176-15, the theoretical continuous driving distance range as calculated in 7.1, and the theoretical manoeuvring distance range as calculated in 7.2, each expressed in kilometres and rounded to two significant figures.

標準檢驗局
內部公務使用

© ISO 2008 – All rights reserved

Annex A
(informative)

Energy consumption

The specific energy consumption of electric vehicles is usually expressed in watt hours per kilometre (Wh/km). An estimate of range can be calculated from the specific energy consumption and the energy capacity of the vehicle's battery set.

Wheelchair energy consumption can be measured as the time integral of battery power, typically calculated as the product of battery current and battery voltage, taken at sufficiently short time intervals. During discharge, battery voltage varies from approximately 10 % above to 10 % below its nominal voltage. It is essential that the accuracy of the measurement of power and the frequency of the measurements be sufficient to obtain the required accuracy for energy measurement.

A typical energy meter measures current and voltage at fixed time intervals, and calculates the product of the current (expressed in amperes), the voltage (expressed in volts), and the measurement interval (expressed in hours) to obtain energy (expressed in watt hours).

A suitable alternative to an energy meter is a charge meter and a voltmeter that records measurements at intervals such that the differences in voltage are sufficiently small to obtain the required accuracy for the energy measurement. The energy (expressed in watt hours) is the sum of the products of each measurement of charge (the difference between the present charge and the previous charge, expressed in ampere hours) over the measurement time interval and the average voltage (expressed in volts) over the same time interval.

For comparison purposes, if it is not declared, a battery's energy capacity (expressed in watt hours) can be estimated as the product of the nominal discharge capacity (expressed in ampere hours) and the nominal voltage (expressed in volts), because the nominal voltage represents approximately the average voltage during a constant-current discharge.

標準檢驗局
內部公務使用

© ISO 2008 – All rights reserved

標準檢驗局
177502

標準檢驗局
內部公務使用

ICS 11.180.10
Price based on 9 pages

© ISO 2008 – All rights reserved

INTERNATIONAL STANDARD

ISO 7176-10

Second edition
2008-11-01

Wheelchairs —

Part 10: Determination of obstacle-climbing ability of electrically powered wheelchairs

Fauteuils roulants —

Partie 10: Détermination de l'aptitude des fauteuils roulants électriques à gravir les obstacles

標準檢驗局
內部公務使用

經濟部標準檢驗局
97. 10. 30
資料中心

Reference number
ISO 7176-10:2008(E)

© ISO 2008

PDF disclaimer

This PDF file may contain embedded typefaces. In accordance with Adobe's licensing policy, this file may be printed or viewed but shall not be edited unless the typefaces which are embedded are licensed to and installed on the computer performing the editing. In downloading this file, parties accept therein the responsibility of not infringing Adobe's licensing policy. The ISO Central Secretariat accepts no liability in this area.

Adobe is a trademark of Adobe Systems Incorporated.

Details of the software products used to create this PDF file can be found in the General Info relative to the file; the PDF-creation parameters were optimized for printing. Every care has been taken to ensure that the file is suitable for use by ISO member bodies. In the unlikely event that a problem relating to it is found, please inform the Central Secretariat at the address given below.

標準檢驗局
內部公務使用

COPYRIGHT PROTECTED DOCUMENT

© ISO 2008

All rights reserved. Unless otherwise specified, no part of this publication may be reproduced or utilized in any form or by any means, electronic or mechanical, including photocopying and microfilm, without permission in writing from either ISO at the address below or ISO's member body in the country of the requester.

ISO copyright office
Case postale 56 • CH-1211 Geneva 20
Tel. + 41 22 749 01 11
Fax + 41 22 749 09 47
E-mail copyright@iso.org
Web www.iso.org

Published in Switzerland

© ISO 2008 – All rights reserved

標準檢驗局
內部公務使用

Foreword

ISO (the International Organization for Standardization) is a worldwide federation of national standards bodies (ISO member bodies). The work of preparing International Standards is normally carried out through ISO technical committees. Each member body interested in a subject for which a technical committee has been established has the right to be represented on that committee. International organizations, governmental and non-governmental, in liaison with ISO, also take part in the work. ISO collaborates closely with the International Electrotechnical Commission (IEC) on all matters of electrotechnical standardization.

International Standards are drafted in accordance with the rules given in the ISO/IEC Directives, Part 2.

The main task of technical committees is to prepare International Standards. Draft International Standards adopted by the technical committees are circulated to the member bodies for voting. Publication as an International Standard requires approval by at least 75 % of the member bodies casting a vote.

Attention is drawn to the possibility that some of the elements of this document may be the subject of patent rights. ISO shall not be held responsible for identifying any or all such patent rights.

ISO 7176-10 was prepared by Technical Committee ISO/TC 173, *Assistive products for persons with disability*, Subcommittee SC 1, *Wheelchairs*.

This second edition cancels and replaces the first edition (ISO 7176-10:1988), which has been technically revised.

ISO 7176 consists of the following parts, under the general title *Wheelchairs*:

— *Part 1: Determination of static stability*

— *Part 2: Determination of dynamic stability of electric wheelchairs*

— *Part 3: Determination of effectiveness of brakes*

— *Part 4: Energy consumption of electric wheelchairs and scooters for determination of theoretical distance range*

— *Part 5: Determination of dimensions, mass and manoeuvring space*

— *Part 6: Determination of maximum speed, acceleration and deceleration of electric wheelchairs*

— *Part 7: Measurement of seating and wheel dimensions*

— *Part 8: Requirements and test methods for static, impact and fatigue strengths*

— *Part 9: Climatic tests for electric wheelchairs*

— *Part 10: Determination of obstacle-climbing ability of electrically powered wheelchairs*

— *Part 11: Test dummies*

— *Part 13: Determination of coefficient of friction of test surfaces*

— *Part 14: Power and control systems for electrically powered wheelchairs and scooters — Requirements and test methods*

© ISO 2008 – All rights reserved

— *Part 15: Requirements for information disclosure, documentation and labelling*

— *Part 16: Resistance to ignition of upholstered parts — Requirements and test methods*

— *Part 19: Wheeled mobility devices for use as seats in motor vehicles*

— *Part 21: Requirements and test methods for electromagnetic compatibility of electrically powered wheelchairs and scooters, and battery chargers*

— *Part 22: Set-up procedures*

— *Part 23: Requirements and test methods for attendant-operated stair-climbing devices*

— *Part 24: Requirements and test methods for user-operated stair-climbing devices*

— *Part 26: Vocabulary*

A Technical Report (ISO/TR 13570-1, *Wheelchairs — Part 1: Guidelines for the application of the ISO 7176 series on wheelchairs*) is also available, giving information on how to use the ISO 7176 standards when selecting a wheelchair and helping readers to understand the purpose for, and content of, the International Standards on wheelchairs.

標準檢驗局
內部公務使用

© ISO 2008 – All rights reserved

Introduction

The ability of an electrically powered wheelchair to climb and descend obstacles can be an important factor in selecting the most appropriate wheelchair for a person, both in terms of access and safety.

Access may be affected by the ability of the wheelchair to safely negotiate obstacles, such as door thresholds, changes in heights of driving surfaces, and kerbs.

The heights of obstacles a wheelchair is capable of climbing can differ from the heights of those it can descend. However, it is important for wheelchair operators and prescribers to be able to know the height of an obstacle that a wheelchair can both ascend and descend. The obstacle-climbing and -descending performance of a wheelchair can also depend on the technique used to operate the wheelchair. The performance can also be affected by the use of alternative operating modes, such as four-wheel drive.

This part of ISO 7176 specifies a consistent method for determining the obstacle-climbing and -descending ability of electrically powered wheelchairs to provide comparable results.

標準檢驗局
內部公務使用

© ISO 2008 – All rights reserved

標準檢驗局
內部公務使用

Wheelchairs —

Part 10: Determination of obstacle-climbing ability of electrically powered wheelchairs

1 Scope

This part of ISO 7176 specifies test methods for determining the ability of electrically powered wheelchairs, including scooters, intended to carry one person, with a maximum nominal speed not exceeding 15 km/h, to climb and descend obstacles.

2 Normative references

The following referenced documents are indispensable for the application of this document. For dated references, only the edition cited applies. For undated references, the latest edition of the referenced document (including any amendments) applies.

ISO 7176-11, *Wheelchairs — Part 11: Test dummies*

ISO 7176-13, *Wheelchairs — Part 13: Determination of coefficient of friction of test surfaces*

ISO 7176-15, *Wheelchairs — Part 15: Requirements for information disclosure, documentation and labelling*

ISO 7176-22, *Wheelchairs — Part 22: Set-up procedures*

ISO 7176-26, *Wheelchairs — Part 26: Vocabulary*

3 Terms and definitions

For the purposes of this part of ISO 7176, the terms and definitions given in ISO 7176-26 apply.

4 Principle

A number of tests are performed to determine the ability of electrically powered wheelchairs to negotiate obstacles such as kerbs and steps.

5 Test equipment

5.1 Test plane, a flat and hard plane such that its whole surface is contained between two imaginary horizontal parallel planes 5 mm apart and horizontal within ± 0,5°, and with a coefficient of friction as specified in ISO 7176-13.

NOTE A test plane capable of accommodating the test obstacle (5.2) and the test wheelchair, placed 0,5 m in front of the obstacle, and facing it, is usually sufficient.

© ISO 2008 – All rights reserved

5.2 Test obstacle, an obstacle as shown in Figure 1, which can be varied in height in increments of 5 mm to a height of 200 mm, with a relative tolerance of 5 % or a tolerance of ± 2 mm, whichever is the greater. The nominal starting height shall be 10 mm, or any multiple of 5 mm chosen by agreement between the test laboratory and the supplier of the wheelchair.

EXAMPLE The starting height could be 50 mm.

NOTE A test obstacle with a continuously adjustable height may be used.

The upper surface of the obstacle shall be sufficiently large that the wheelchair can climb on to the obstacle and come to rest with all wheels accommodated on the obstacle at the same time and sufficiently large that the wheelchair can be placed on the obstacle as described in 7.5 b).

The upper front edge of the obstacle shall be smooth and shall have a radius, r, of $3\,^{+2}_{0}$ mm (see Figure 1). The front face of the obstacle, excluding the radius at the top, shall lie between two imaginary vertical planes 4 mm apart. The angle between the front edge of the obstacle and the upper surface shall be 90° ± 1°.

The surface of the obstacle that can come into contact with the wheelchair shall have a coefficient of friction as specified in ISO 7176-13. The obstacle shall be fixed to the test plane to prevent movement of the obstacle during the test.

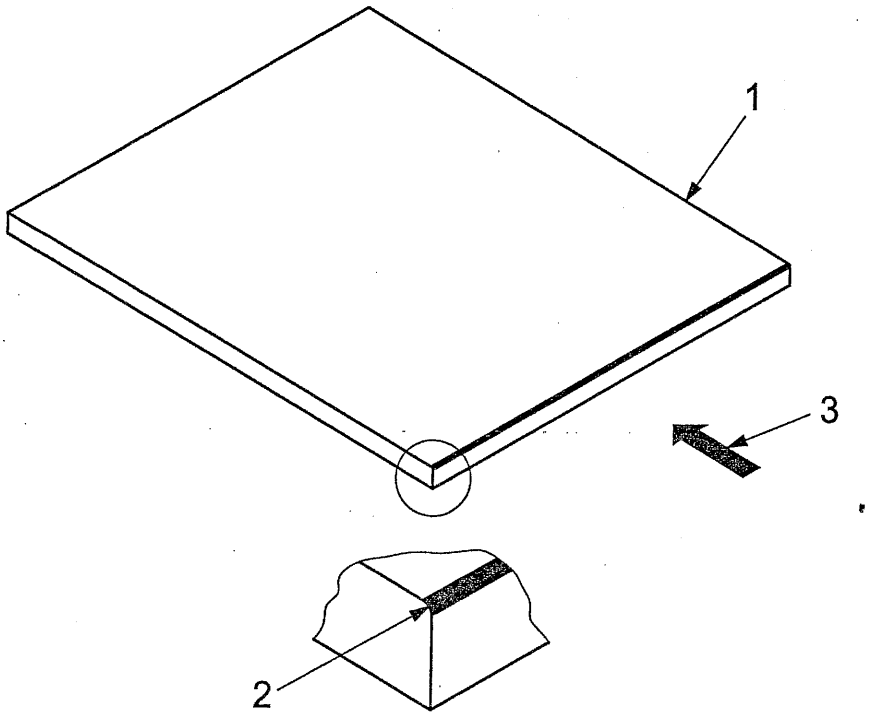

Key

1 test obstacle
2 upper front edge with radius r
3 direction of approach

Figure 1 — Test obstacle

6 Preparation

Carry out the following preparation sequence.

a) Fit the largest battery specified by the manufacturer.

標準檢驗局
內部公務使用

© ISO 2008 – All rights reserved

標準檢驗局
內部公務使用

b) Set up the wheelchair as specified in ISO 7176-22.

Load the wheelchair using one of the following:

1) a dummy as specified in ISO 7176-11, selected and fitted as specified in ISO 7176-22;

2) a human test occupant, combined with a mass evenly distributed over the body support system of the wheelchair such that the total mass is within $^{+2}_{0}$ kg of the mass of the dummy specified in Item 1).

Where a human test occupant is used, it is essential that appropriate precautions be taken to ensure the person's safety.

c) If practicable, adjust all parts that might come into contact with the obstacle, other than the wheels and devices intended by the manufacturer to facilitate the climbing of obstacles, to prevent them striking the obstacle first.

EXAMPLE Foot supports.

d) Measure and record the height above the test plane of the lowest part of the foot supports to an accuracy of ± 1 mm.

e) If practicable, set anti-tipping devices to prevent contact with the test plane and test obstacle during the performance of the tests, otherwise set them at their highest position.

NOTE This does not include removal of anti-tipping devices.

f) If devices intended by the manufacturer to facilitate the climbing or descending of obstacles are present, follow the manufacturer's instructions to set them in a manner applicable to the test being carried out.

EXAMPLE Kerb climbers.

7 Test procedures

WARNING The following tests can be hazardous. Take appropriate safety precautions to prevent injury to test personnel.

7.1 Carry out the following test sequence.

a) Set the test obstacle at the starting height specified in 5.2.

b) Position the wheelchair on the test plane at an angle of incidence to the obstacle of 90° ± 5°, with all castors aligned in the trailing position, and with the wheelchair in contact with the obstacle.

c) With the control device set for full-speed command, drive the wheelchair forwards so that it completely mounts the obstacle with all supporting wheels on the obstacle's upper surface. Immediately release the control device. Record whether any part of the wheelchair, other than the wheels and devices intended by the manufacturer to facilitate the climbing of obstacles, came into contact with the obstacle.

d) Increase the height of the obstacle by one increment as specified in 5.2 and repeat a) to c).

e) Repeat d) until the wheelchair can no longer climb the obstacle or exhibits uncontrolled behaviour, such as tipping over or continuing to accelerate after the control device is released.

f) Record the maximum height of the obstacle that the wheelchair is able to climb.

© ISO 2008 – All rights reserved

標準檢驗局
內部公務使用

7.2 Repeat the test procedure specified in 7.1, with a run-up of 500 mm ± 25 mm measured as the horizontal distance between the obstacle and that part of the wheelchair which will first come into contact with the obstacle (see Figure 2).

7.3 Repeat the test procedure specified in 7.1, but with the wheelchair facing rearwards when climbing the obstacle.

7.4 Repeat the test procedure specified in 7.3, but with a run-up of 500 mm ± 25 mm measured as the horizontal distance between the obstacle and that part of the wheelchair which will first come into contact with the obstacle (see Figure 2).

Dimensions in millimetres

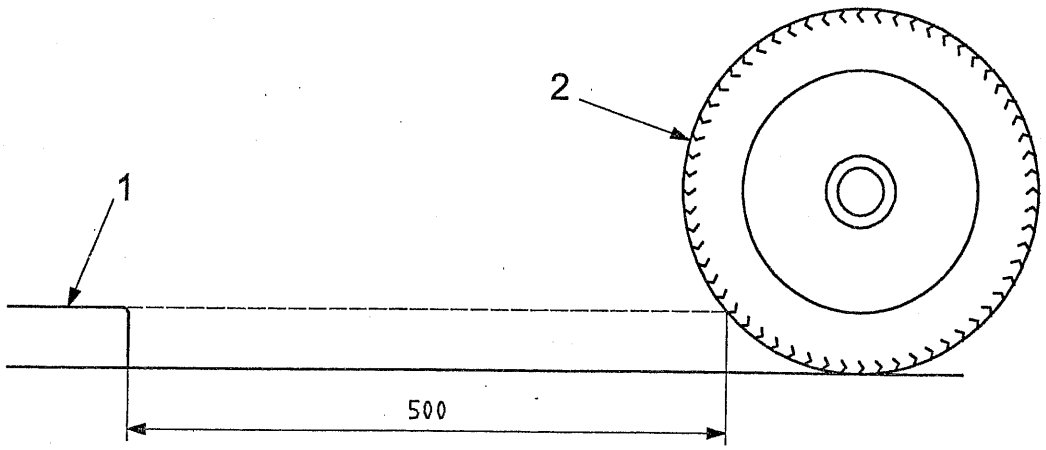

Key

1 test obstacle

2 part of the wheelchair that will first come into contact with the obstacle

NOTE A wheel is shown as an example.

Figure 2 — Measurement of run-up

7.5 Carry out the following test sequence.

a) Set the test obstacle at the starting height specified in 5.2.

b) Position the wheelchair on the obstacle at an angle of incidence to the front edge of 90° ± 5° and with a distance of 500 mm ± 25 mm between the edge and the point(s) of contact of the nearest supporting wheel(s). Align all castors in the trailing position.

c) With the control device set for full-speed command, drive the wheelchair forward off the obstacle until all supporting wheels are on the test plane and no part of the wheelchair remains in contact with the obstacle. Immediately release the control device. Record whether any part of the wheelchair, other than the wheels and devices intended by the manufacturer to facilitate the descending of obstacles, came into contact with the obstacle.

d) Increase the height of the obstacle by one increment as specified in 5.2 and repeat a) to c).

e) Repeat d) until the wheelchair can no longer descend the obstacle or exhibits uncontrolled behaviour, such as tipping over or continuing to accelerate after the control device is released.

f) Record the maximum height of the obstacle that the wheelchair is able to descend.

7.6 Repeat the test procedure specified in 7.5, but with the wheelchair facing rearwards when descending the obstacle.

© ISO 2008 – All rights reserved

7.7 If any other technique is recommended in the user manual for climbing or descending obstacles, repeat the test procedures specified in 7.1 to 7.4, or 7.5 and 7.6, as applicable, using the manufacturer's recommended technique.

If, in the user manual, the manufacturer recommends settings different from those used in 7.1 to 7.6, follow the manufacturer's recommendations.

EXAMPLE Alternative techniques might include

— setting the wheelchair speed to climb more slowly,

— using a different angle of approach or run-up distance, and

— changing occupant-adjustable or assistant-adjustable controller settings.

7.8 If the wheelchair is equipped with devices intended by the manufacturer to facilitate the climbing and/or descending of obstacles that can be set to be inoperative, set them to be inoperative and repeat the test procedures specified in 7.1 to 7.4, and/or 7.5 and 7.6, as applicable.

7.9 If the wheelchair has more than one mode of operation which can affect the ability of the wheelchair to climb or descend obstacles, repeat the test procedures specified in 7.1 to 7.8 for each operating mode.

EXAMPLE Four-wheel drive mode, indoor mode, outdoor mode, standing mode.

8 Test report

The test report shall contain the following information:

標準檢驗局
內部公務使用

a) a reference to this part of ISO 7176;

b) the name and address of the testing institution;

c) the accreditation of the test laboratory;

d) the name and address of the manufacturer of the wheelchair;

e) the date of issue of the test report;

f) the wheelchair type and any serial and/or batch numbers;

g) the mass of the dummy or, if a person is used, the total mass of the driver and weights;

h) details of the set-up of the wheelchair as specified in ISO 7176-22;

i) a photograph of the wheelchair equipped as during the tests;

j) the results of the tests specified in 7.1 to 7.9;

k) whether devices intended by the manufacturer to facilitate the climbing and/or descending of obstacles were fitted;

l) the height from the ground to the lowest point of the foot supports;

m) details of any obstacle climbing and/or descending techniques recommended by the manufacturer and used in the tests specified in 7.8;

n) details of the operating modes used in the tests specified in 7.9.

© ISO 2008 – All rights reserved

9 Disclosure

The following results shall be disclosed in the manufacturer's specification sheets in accordance with the format specified in ISO 7176-15:

a) Maximum obstacle height that can be climbed and descended, reference operation .....mm;

NOTE This is the minimum of the results recorded in tests 7.1 to 7.6.

b) Maximum obstacle height that can be climbed and descended, manufacturer's recommended operation .....mm.

NOTE This is minimum height of the results of tests 7.7 to 7.9.

標準檢驗局
內部公務使用

© ISO 2008 – All rights reserved

標準檢驗局
178167

標準檢驗局
內部公務使用

ICS 11.180.10
Price based on 6 pages

© ISO 2008 – All rights reserved