INTERNATIONAL STANDARD

ISO 7176-5

Second edition
2008-06-01

Wheelchairs —

Part 5: Determination of dimensions, mass and manoeuvring space

Fauteuils roulants —

Partie 5: Détermination des dimensions, de la masse et de l'espace de manoeuvre

標準檢驗局
內部公務使用

經濟部標準檢驗局
97. 6. 13
資料中心

Reference number
ISO 7176-5:2008(E)

PDF disclaimer

dded typefaces. In accordance with Adobe's licensing policy, this file may be printed or viewed but efaces which are embedded are licensed to and installed on the computer performing the editing. In ept therein the responsibility of not infringing Adobe's licensing policy. The ISO Central Secretariat

ystems Incorporated.

used to create this PDF file can be found in the General Info relative to the file; the PDF-creation inting. Every care has been taken to ensure that the file is suitable for use by ISO member bodies. In relating to it is found, please inform the Central Secretariat at the address given below.

標準檢驗局
內部公務使用

PROTECTED DOCUMENT

ise specified, no part of this publication may be reproduced or utilized in any form or by any means, g photocopying and microfilm, without permission in writing from either ISO at the address below or of the requester.

neva 20

標準檢驗局
內部公務使用

ıntents

Page

eword v

oduction vii

Scope 1

Normative references 1

Terms and definitions 2

Wheelchair classes and occupant mass groups 22
General 22
Classes of electrically powered wheelchairs 22
Occupant mass groups 22

Test apparatus 22

Selection of the test wheelchair 26

Preparation of the test wheelchair 27
General 27
Wheelchair equipment 27
Wheelchair adjustment 27
Final check 32
Positioning 32
Loading of the wheelchair 32
Records 34
Use of hand space gauge and foot space gauges 34
Wheel rotation 34
) Asymmetrical design of test wheelchair 35

Required measurements 35
General 35
Full overall length 36
Overall width 36
Handgrip height 36
Stowage length 36
Stowage width 37
Stowage height 37
Rising 37
Total mass 37
) Mass of heaviest part 37
1 Pivot width 38
2 Reversing width 38
3 Turning diameter 38
4 Ground clearance 39
5 Required width of angled corridor 39
6 Required doorway entry depth 39
7 Required corridor width for side opening 39

Disclosure of information 41
General 41
41

Annex A (informative) Technical dimensions 45
Annex B (informative) Pivot width and reversing width 59
Annex C (informative) Turning diameter 69
Annex D (informative) Wheelchair longitudinal axis and wheelchair centre-point 74
Annex E (informative) Guidelines and recommendations for wheelchair design and performance 75
Bibliography 79

標準檢驗局
內部公務使用

© ISO 2008 – All rights reserved

標準檢驗局
內部公務使用

Foreword

ISO (the International Organization for Standardization) is a worldwide federation of national standards bodies (ISO member bodies). The work of preparing International Standards is normally carried out through ISO technical committees. Each member body interested in a subject for which a technical committee has been established has the right to be represented on that committee. International organizations, governmental and non-governmental, in liaison with ISO, also take part in the work. ISO collaborates closely with the International Electrotechnical Commission (IEC) on all matters of electrotechnical standardization.

International Standards are drafted in accordance with the rules given in the ISO/IEC Directives, Part 2.

The main task of technical committees is to prepare International Standards. Draft International Standards adopted by the technical committees are circulated to the member bodies for voting. Publication as an International Standard requires approval by at least 75 % of the member bodies casting a vote.

Attention is drawn to the possibility that some of the elements of this document may be the subject of patent rights. ISO shall not be held responsible for identifying any or all such patent rights.

ISO 7176-5 was prepared by Technical Committee ISO/TC 173, *Assistive products for persons with disability*, Subcommittee SC 1, *Wheelchairs*.

This second edition cancels and replaces the first edition (ISO 7176-5:1986) which has been technically revised.

ISO 7176 consists of the following parts, under the general title *Wheelchairs*:

— *Part 1: Determination of static stability*

— *Part 2: Determination of dynamic stability of electric wheelchairs*

— *Part 3: Determination of effectiveness of brakes*

— *Part 4: Energy consumption of electric wheelchairs and scooters for determination of theoretical distance range*

— *Part 5: Determination of dimensions, mass and manoeuvring space*

— *Part 6: Determination of maximum speed, acceleration and deceleration of electric wheelchairs*

— *Part 7: Measurement of seating and wheel dimensions*

— *Part 8: Requirements and test methods for static, impact and fatigue strengths*

— *Part 9: Climatic tests for electric wheelchairs*

— *Part 10: Determination of obstacle-climbing ability of electrically powered wheelchairs*

— *Part 11: Test dummies*

— *Part 13: Determination of coefficient of friction of test surfaces*

— *Part 14: Power and control systems for electrically powered wheelchairs and scooters — Requirements and test methods*

© ISO 2008 – All rights reserved

— *Part 15: Requirements for information disclosure, documentation and labelling*

— *Part 16: Resistance to ignition of upholstered parts — Requirements and test methods*

— *Part 19: Wheeled mobility devices for use as seats in motor vehicles*

— *Part 21: Requirements and test methods for electromagnetic compatibility of electrically powered wheelchairs and motorized scooters, and battery chargers*

— *Part 22: Set-up procedures*

— *Part 23: Requirements and test methods for attendant-operated stair-climbing devices*

— *Part 24: Requirements and test methods for user-operated stair-climbing devices*

— *Part 26: Vocabulary*

標準檢驗局
內部公務使用

© ISO 2008 – All rights reserved

Introduction

The purpose of this part of ISO 7176 is to provide technical definitions together with appropriate measurement procedures for measuring important dimensions and masses of manual wheelchairs and electrically powered wheelchairs including scooters, which can be used to estimate the appropriateness for a given environment.

A new approach is used for the pre-selection of the reference size from a wheelchair model with a range of various dimensions by introducing reference dimensions of the intended occupant. This new approach ensures repeatable and comparable test results.

The information in this part of ISO 7176 is intended for three main reader groups:

— prescribers and occupants of wheelchairs;

— architects and public authorities;

— manufacturers, wheelchair providers, clinicians and test laboratories.

Features that are important to wheelchair occupants, architects and public authorities, such as overall dimensions and the estimation of the space needed and general manoeuvrability, are contained in Clause 8. Values for the different features are disclosed in the wheelchair's specification sheet. The values can be used to determine, before purchase, the wheelchair's suitability in relation to specific requirements and needs.

The technical features of a wheelchair which are of importance to manufacturers, wheelchair providers, clinicians and test laboratories, such as items to be considered when manufacturing, setting up, adjusting, repairing or testing wheelchairs, are included in Annex A.

Technical Report ISO/TR 13570-1[1] is also available, giving a simplified explanation of the different parts of ISO 7176.

Technical Report, ISO/TR 13570-2[2], is under consideration.

標準檢驗局
內部公務使用

© ISO 2008 – All rights reserved

標準檢驗局
內部公務使用

Wheelchairs —

Part 5: Determination of dimensions, mass and manoeuvring space

1 Scope

This part of ISO 7176 specifies methods for the determination of wheelchair dimensions and mass.

This includes specific methods for the determination of outside dimensions when the wheelchair is occupied by a reference occupant and the required manoeuvring space needed for wheelchair manoeuvres commonly carried out in daily life.

This part of ISO 7176 specifies requirements for the disclosure of the dimensions and masses and contains five informative annexes.

Annex A specifies methods for the determination of technical dimensions that can be important to the performance of the wheelchair.

Annex B provides detailed information about pivot width and reversing width.

Annex C provides detailed information about the turning diameter.

Annex D provides details on determining the wheelchair longitudinal axis and wheelchair centre-point.

Annex E provides technical guidelines and recommendations for many of the measurements specified to facilitate improved understanding, design and construction of wheelchairs.

This part of ISO 7176 is applicable to manual wheelchairs and electrically powered wheelchairs (including scooters).

2 Normative references

The following referenced documents are indispensable for the application of this document. For dated references, only the edition cited applies. For undated references, the latest edition of the referenced document (including any amendments) applies.

ISO 7176-7, *Wheelchairs — Part 7: Measurement of seating and wheel dimensions*

ISO 7176-11, *Wheelchairs — Part 11: Test dummies*

ISO 7176-13, *Wheelchairs — Part 13: Determination of coefficient of friction of test surfaces*

ISO 7176-15, *Wheelchairs — Part 15: Requirements for information disclosure, documentation and labelling*

ISO 7176-22:2000, *Wheelchairs — Part 22: Set-up procedures*

ISO 7176-26, *Wheelchairs — Part 26: Vocabulary*

© ISO 2008 – All rights reserved

標準檢驗局
內部公務使用

3 Terms and definitions

For the purposes of this document, the terms and definitions given in ISO 7176-26 and the following apply.

3.1
castor wheel misalignment
lateral distance between the ground contact point of the castor wheel and that point where the castor stem axis intersects with the ground

See Figure 1.

NOTE 1 Measurement is in accordance with A.22.

NOTE 2 A non-zero value usually indicates a misalignment. The value is positive if the ground contact point of the castor wheel is medial to the point of intersection of the castor stem axis with the ground, zero if in the desired neutral position and negative if the ground contact point of the castor wheel is lateral to the point of intersection of the castor stem axis with the ground.

NOTE 3 Sketches a), b) and c) in front view; d) in top view.

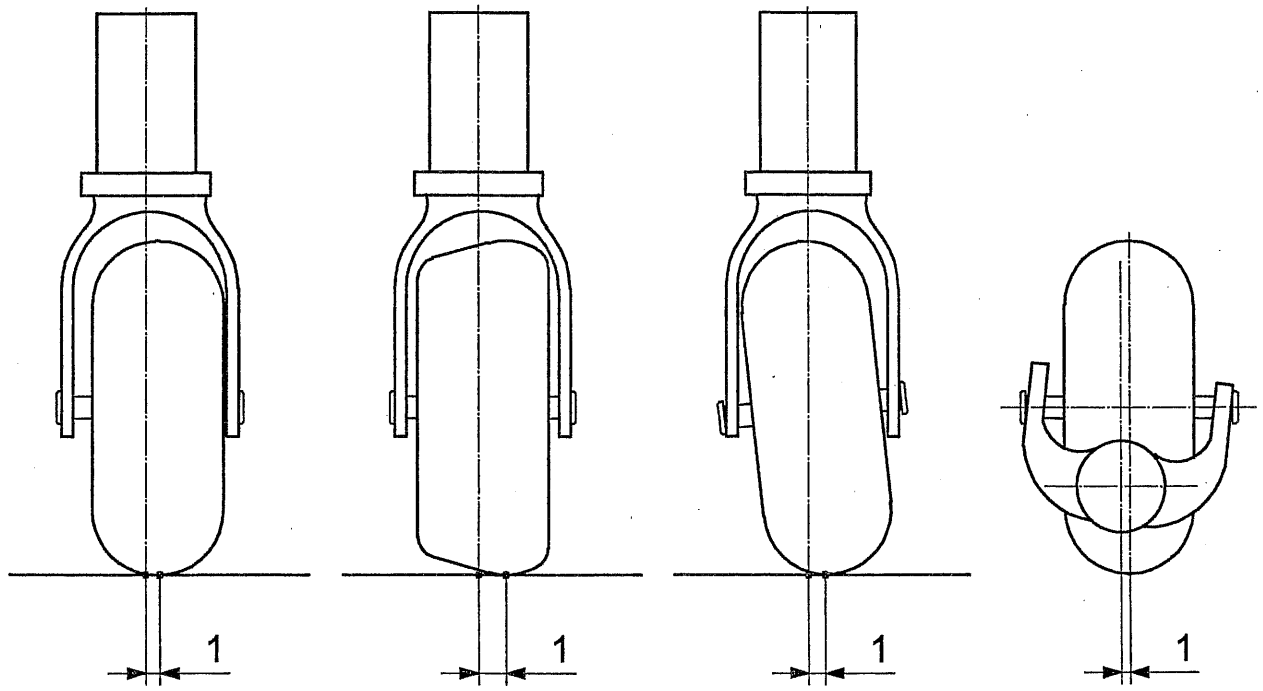

a) shifted wheel b) conical wheel c) tilted axle d) oblique axle

Key

1 castor wheel misalignment

Figure 1 — Castor wheel misalignment (exaggerated)

© ISO 2008 – All rights reserved

標準檢驗局
內部公務使用

3.2
fixed wheel
wheel that cannot change its axial orientation relative to the wheelchair during motion

EXAMPLE Drive wheel, manoeuvring wheel or guide wheel.

3.3
front wheel track
distance between the ground contact points of the front wheels

See Figure 2.

NOTE 1 Measurement is in accordance with A.15.

NOTE 2 Sketch in front view.

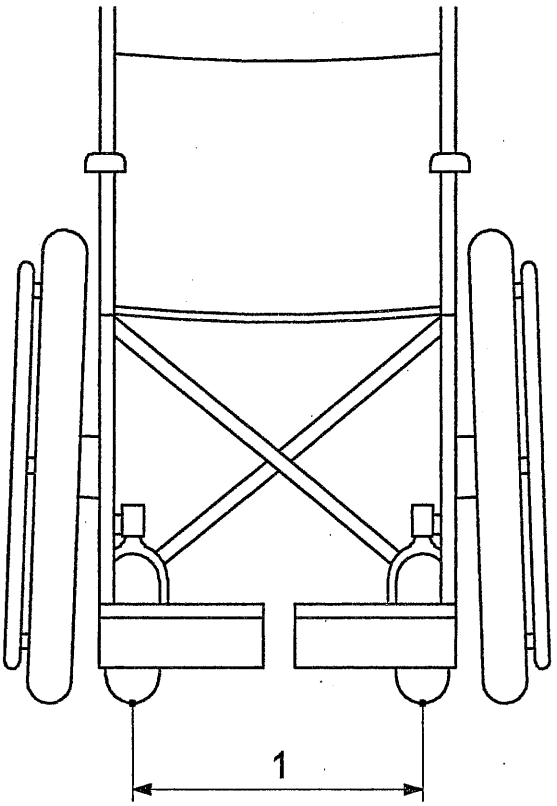

Key
1 front wheel track

Figure 2 — Front wheel track (example)

© ISO 2008 – All rights reserved

3.4
full occupied length
distance between the most forward and most rearward point of the wheelchair including lower leg support assemblies and a reference occupant

See Figure 3.

NOTE 1 Measurement is in accordance with A.8.

NOTE 2 This measurement applies where the wheelchair has fixed leg supports and/or foot supports or where the leg supports and/or foot supports are removable but not removed.

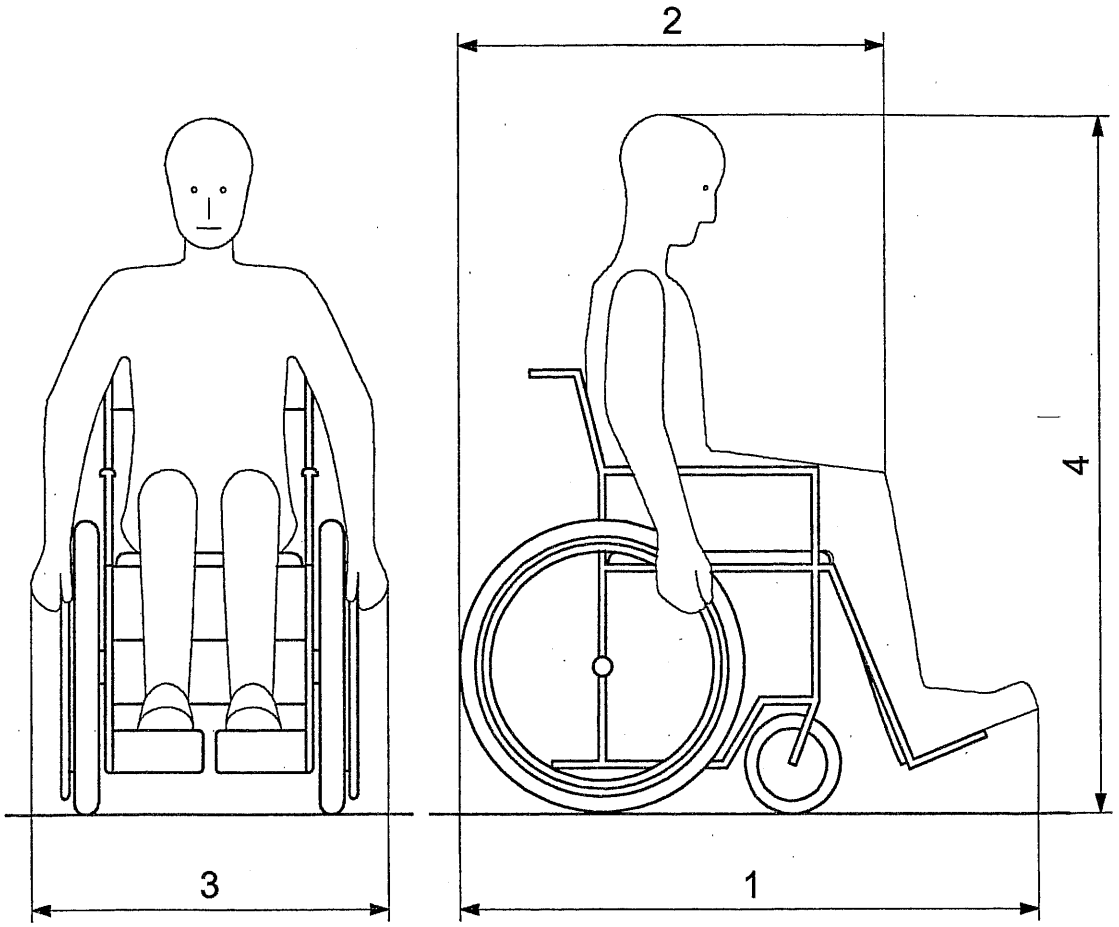

Key

1 full occupied length
2 reduced occupied length
3 occupied width
4 occupied height

Figure 3 — Dimensions of the wheelchair when occupied

標準檢驗局
內部公務使用

© ISO 2008 – All rights reserved

3.5
full overall length
distance between the most forward and most rearward point of the wheelchair when assembled and ready for use with any leg supports, foot supports and any anti-tipping devices fitted

See Figure 4.

NOTE 1 Measurement is in accordance with 8.2.

NOTE 2 This measurement applies where the wheelchair has fixed leg supports and/or foot supports or where the leg supports and/or foot supports are removable but not removed.

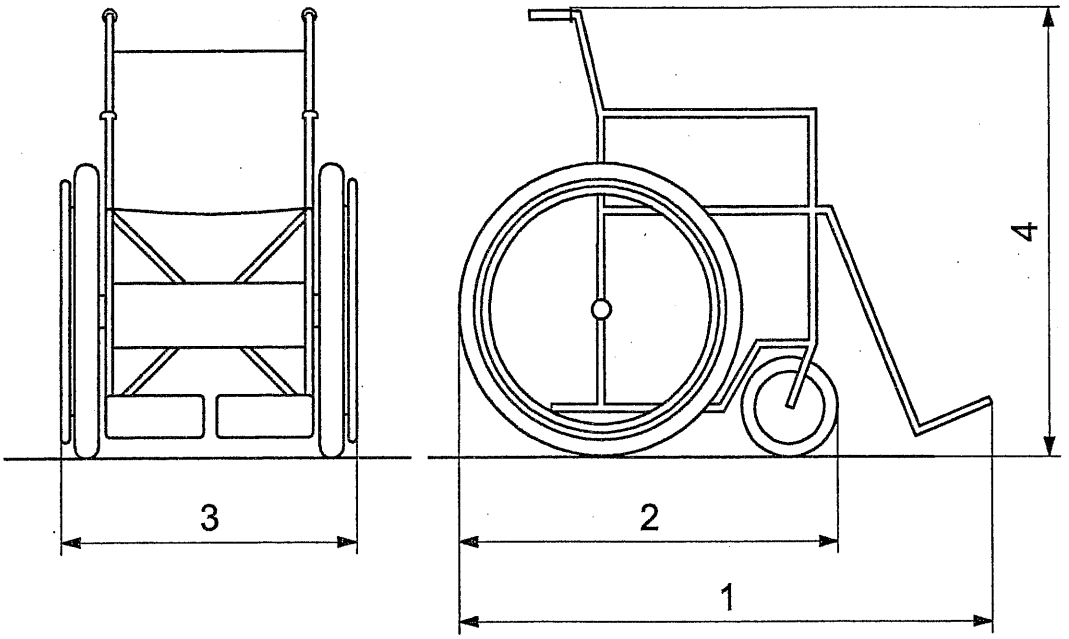

Key

1 full overall length
2 reduced overall length
3 overall width
4 overall height

Figure 4 — Overall wheelchair dimensions

標準檢驗局
內部公務使用

© ISO 2008 – All rights reserved

3.6
ground clearance
minimum clearance between the occupied wheelchair and the ground

See Figure 5.

NOTE Measurement is in accordance with 8.14.

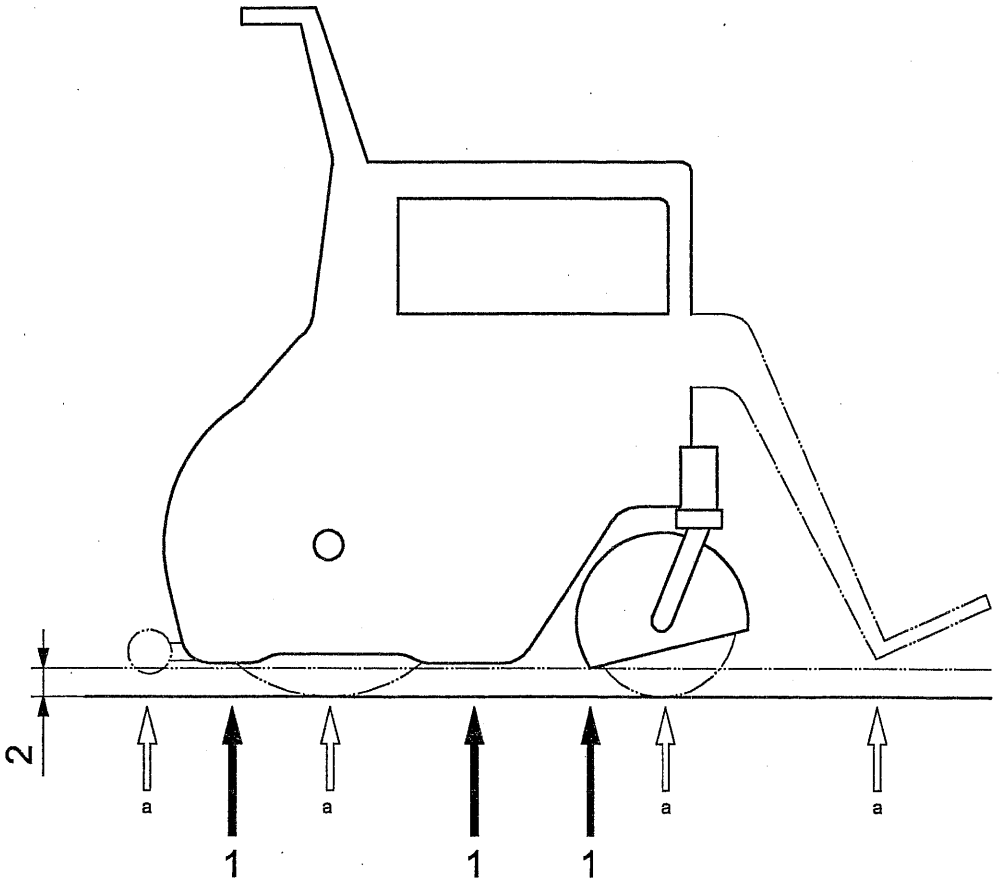

Key

1 typical critical points

2 ground clearance

a Wheels, adjustable leg/foot supports and anti-tip devices are not considered.

Figure 5 — Ground clearance (example)

3.7
ground contact point
midpoint of the area where the wheel contacts the ground

標準檢驗局
內部公務使用

See Figure 6.

NOTE 1 One means of identifying the ground contact point is to place four feeler gauges of equal thickness, and with at least one straight edge, on the test plane (an example of a feeler gauge is a piece of tin or other rigid material, 0,5 mm ± 0,2 mm thick). Push two of them from the front and rear under the wheels with their straight edges horizontal and perpendicular to the wheelchair longitudinal axis and push the other two of them, from both sides, under the wheels with their straight edges parallel to the wheelchair longitudinal axis. Push all feeler gauges until they contact the wheel. The ground contact point is located in the middle of the rectangle created by the straight edges of the four feeler gauges.

NOTE 2 Sketch a) in side view; b) in front view; c) in 3/4 view with wheelchair removed.

© ISO 2008 – All rights reserved

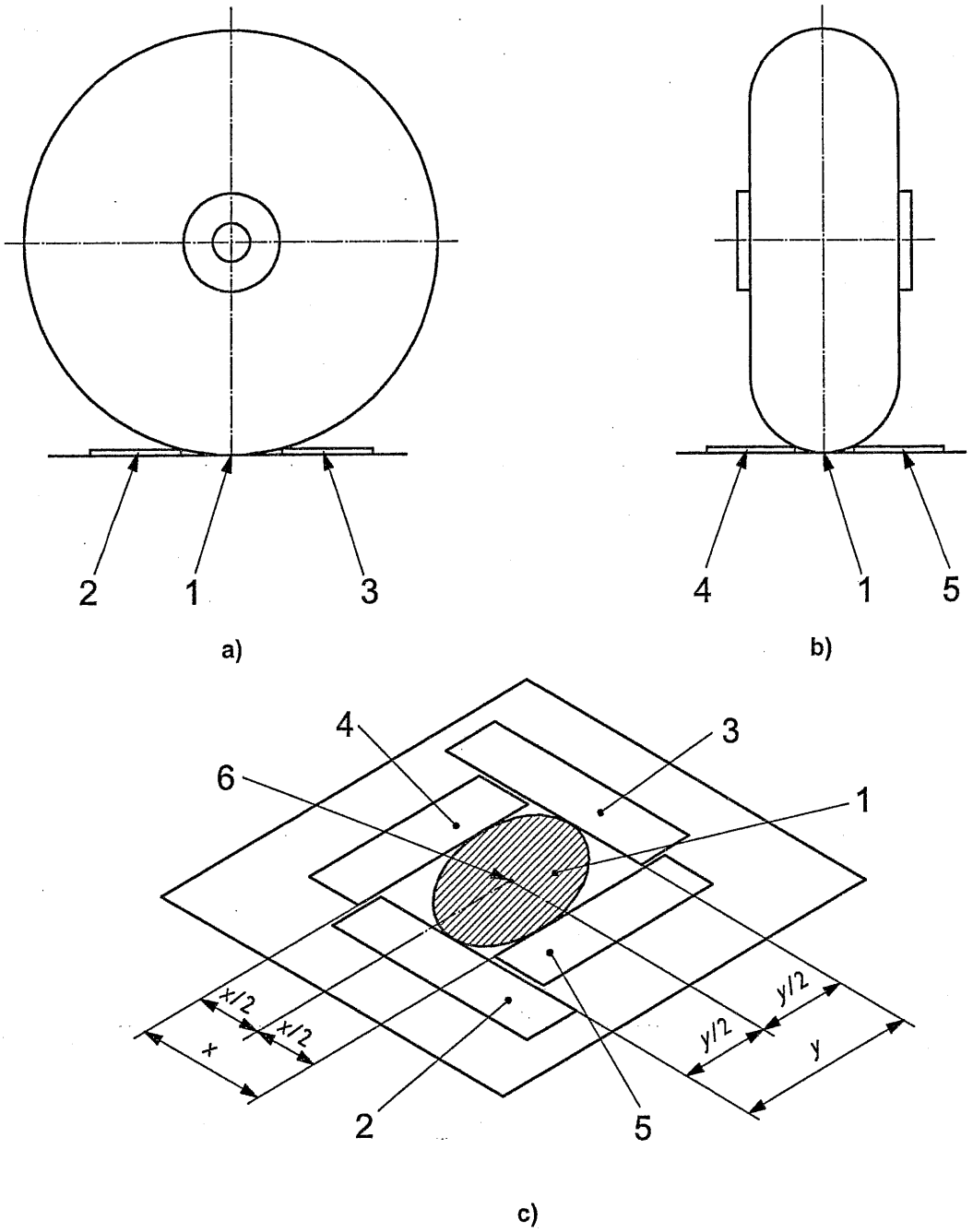

Key

1 area of contact between wheel and ground
2 front feeler gauge
3 rear feeler gauge
4 right feeler gauge
5 left feeler gauge
6 ground contact point

標準檢驗局
內部公務使用

Figure 6 — Identification of ground contact point

3.8
handgrip height
vertical distance from the ground to the handgrip reference points of the wheelchair

NOTE Measurement is in accordance with 8.4.

© ISO 2008 – All rights reserved

3.9
handgrip reference point
outermost lateral point at half length of the handgrip

See Figure 7.

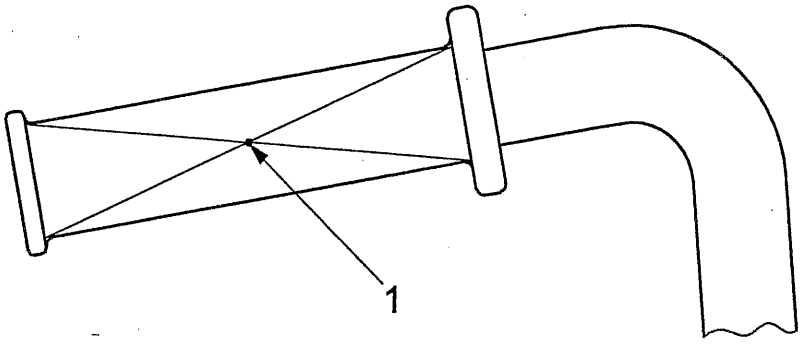

Key

1 handgrip reference point

Figure 7 — Handgrip reference point

3.10
lateral handrim deviation
deviation of the handrim from a flat plane that is perpendicular to the axle

NOTE 1 Measurement is in accordance with A.7.

NOTE 2 Lateral handrim deviation is expressed as the difference between the position of the innermost and outermost points of the outermost continuous surface of the handrim, measured in the direction of the axis of the wheel. A non-zero value usually indicates a misalignment.

3.11
lateral wheel deviation
deviation of the rim of the wheel from a flat plane that is perpendicular to the wheel axle

See Figure 8.

NOTE 1 Measurement is in accordance with A.5.

NOTE 2 Lateral wheel deviation is expressed as the difference between the position of the innermost and outermost points of the outermost continuous surface of the rim of the wheel, measured in the direction of the axis of the wheel. A non-zero value usually indicates a misalignment.

3.12
mass of heaviest part
mass of the heaviest part (or assembly of parts) of the wheelchair when dismantled for transport or stowing purposes

NOTE Measurement is in accordance with 8.10.

3.13
movable wheel
wheel that can change its axial orientation relative to the wheelchair during motion

EXAMPLE Pivot wheel, pivot drive wheel or castor wheel.

標準檢驗局
內部公務使用

© ISO 2008 – All rights reserved

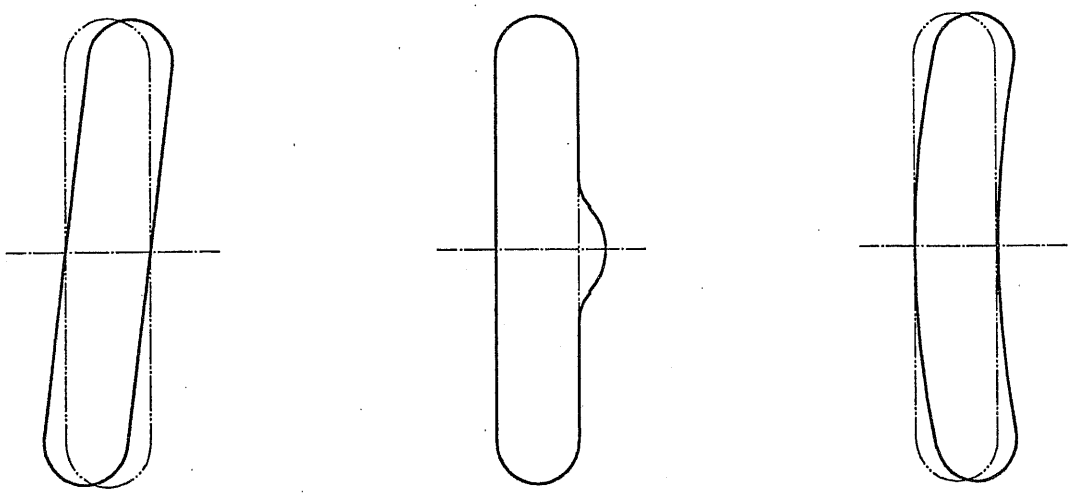

a) wheel with skew axle b) wheel with lateral bump c) uneven wheel

Figure 8 — Some wheels with lateral wheel deviation

3.14
occupied height
vertical distance from the test plane to the uppermost point of the head of a reference occupant

See Figure 3.

NOTE 1 Measurement is in accordance with A.11.

NOTE 2 The occupied height measurement takes the presence of a seat cushion into account.

3.15
occupied width
horizontal distance across the wheelchair including a reference occupant

See Figure 3.

NOTE 1 Measurement is in accordance with A.10.

NOTE 2 Occupied width includes the hands of the occupant if the wheelchair has handrims.

3.16
pivot width
minimum distance between two vertical and parallel walls between which a wheelchair with full differential steering can turn through 180° with one single and continuous turning manoeuvre

See Figure 9 and B.2.

NOTE Measurement is in accordance with 8.11.

標準檢驗局
內部公務使用

© ISO 2008 – All rights reserved

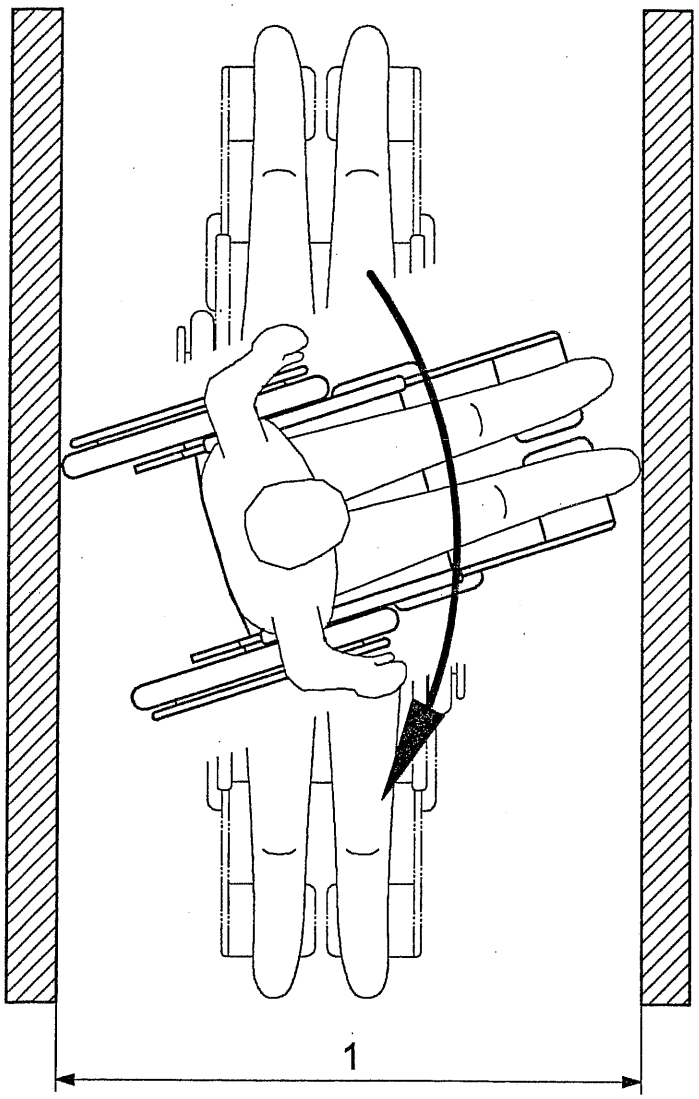

Key

1 pivot width

Figure 9 — Pivot width

3.17
radial handrim deviation
deviation of the handrim from a true circle that is concentric to the axle

NOTE 1 Measurement is in accordance with A.6.

NOTE 2 Radial handrim deviation is expressed as the difference between the longest and the shortest outer radius of each handrim. A non-zero value usually indicates a misalignment.

標準檢驗局
內部公務使用

© ISO 2008 – All rights reserved

3.18
radial wheel deviation
deviation of the outer circumference of the wheel from a true circle that is concentric to the axle

See Figure 10.

NOTE 1 Measurement is in accordance with A.4.

NOTE 2 Radial wheel deviation is expressed as the difference between the longest and the shortest radius of the wheel. A non-zero value usually indicates a misalignment.

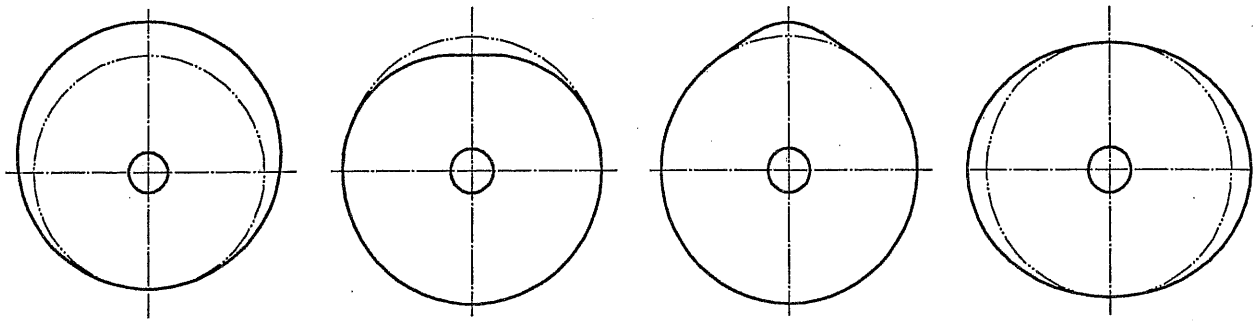

a) eccentric wheel **b) wheel with flat part** **c) wheel with bump** **d) elliptical wheel**

Figure 10 — Some wheels with radial wheel deviation

3.19
ramp transition angle
angle between ramp and horizontal on which the transition to level ground can be negotiated without contacting the ramp or the ground with any part other than the wheels

See Figure 11.

NOTE 1 Measurement is in accordance with A.12.

NOTE 2 Ramp transition angle concerns the smallest of the three angles achieved when driving over a transition between level ground and a ramp:

a) with front parts at the lower transition;

b) with rear parts at the lower transition;

c) with parts that are located between the wheels at the upper transition.

The ramp transition angle is expressed in degrees.

NOTE 3 Since architects express the angles of ramps in percent, the ramp transition angle may also be expressed as a percentage. The ramp transition angle can be converted from degrees to percent as follows:

$$P = \frac{7}{4} D$$

where P is the angle in percent and D is the angle in degrees (for angles below 10° the error is less than 1 %, and below 20° the error is less than 4 %).

標準檢驗局
內部公務使用

© ISO 2008 – All rights reserved

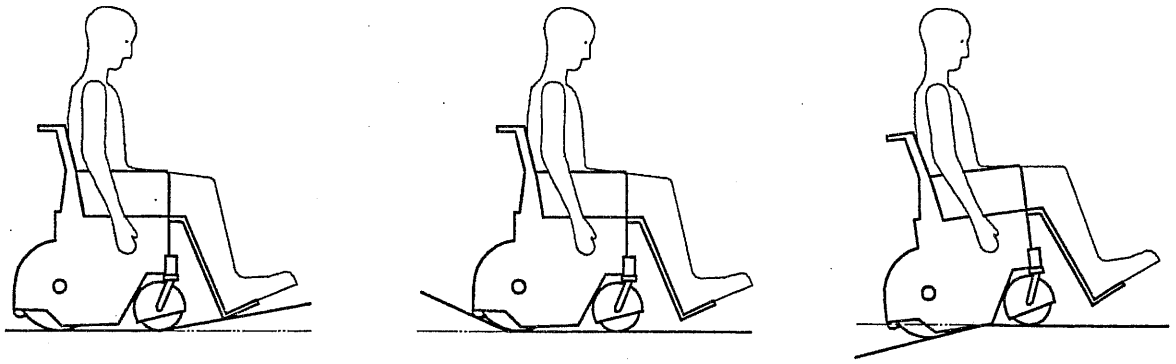

a) front parts at the lower transition

b) rear parts at the lower transition

c) parts located between the wheels at the upper transition

Figure 11 — Ramp transition angle

3.20
rear wheel track
distance between the ground contact points of the rear wheel

標準檢驗局
內部公務使用

See Figure 12.

NOTE 1 Measurement is in accordance with A.14.

NOTE 2 Sketch is a rear view.

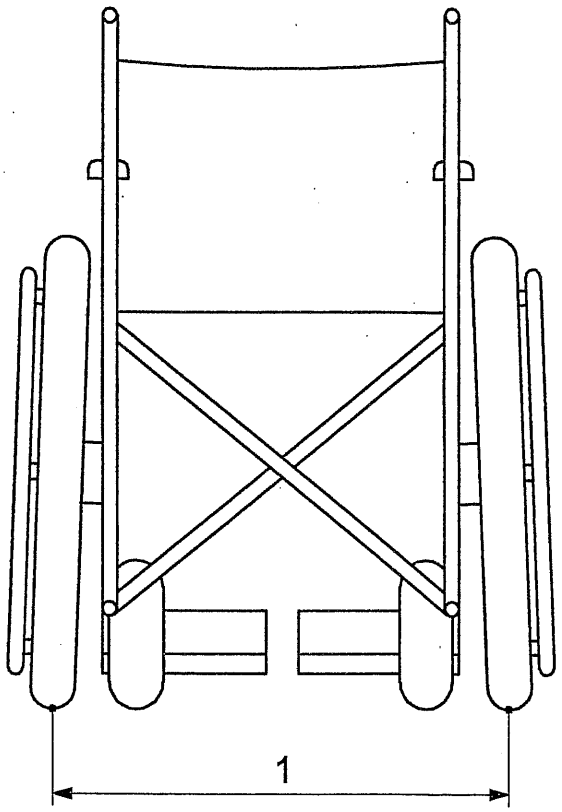

Key

1 rear wheel track

Figure 12 — Rear wheel track (example)

© ISO 2008 – All rights reserved

3.21
reduced occupied length
distance between the most forward and most rearward point of the wheelchair without lower leg support assemblies but including a reference occupant

See Figure 3.

NOTE 1 Measurement is in accordance with A.9.

NOTE 2 This measurement applies where the wheelchair is delivered without leg supports and/or foot supports or where the leg supports and/or foot supports are removable and removed.

3.22
reduced overall length
distance between the most forward and the most rearward point of the wheelchair when assembled and ready for use without lower leg support assemblies

See Figure 4.

NOTE 1 Measurement is in accordance with A.2.

NOTE 2 This measurement applies where the wheelchair is delivered without leg supports and/or foot supports or where the leg supports and/or foot supports are removable and removed.

標準檢驗局
內部公務使用

© ISO 2008 – All rights reserved

標準檢驗局
內部公務使用

3.23
required corridor width for side opening
minimum width of a corridor necessary to permit the wheelchair to move forwards into or out of the corridor through an open doorway of defined width in one wall

See Figure 13.

NOTE Measurement is in accordance with 8.17.

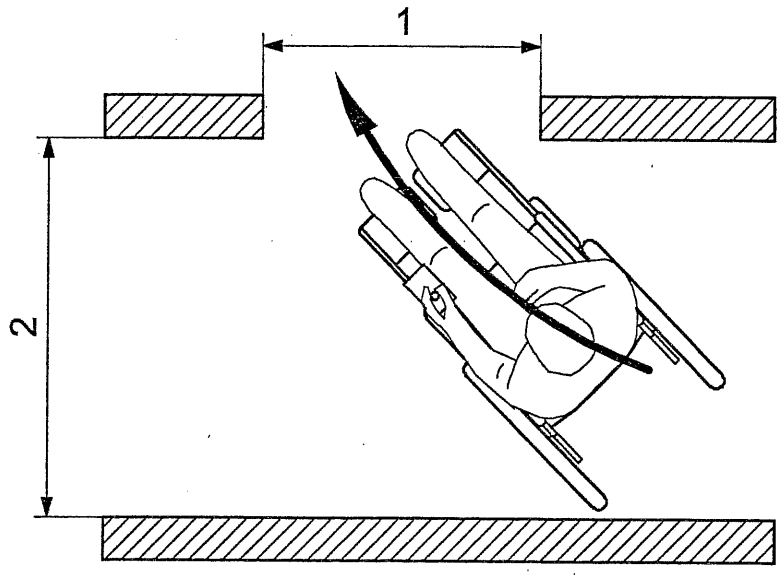

a) exiting

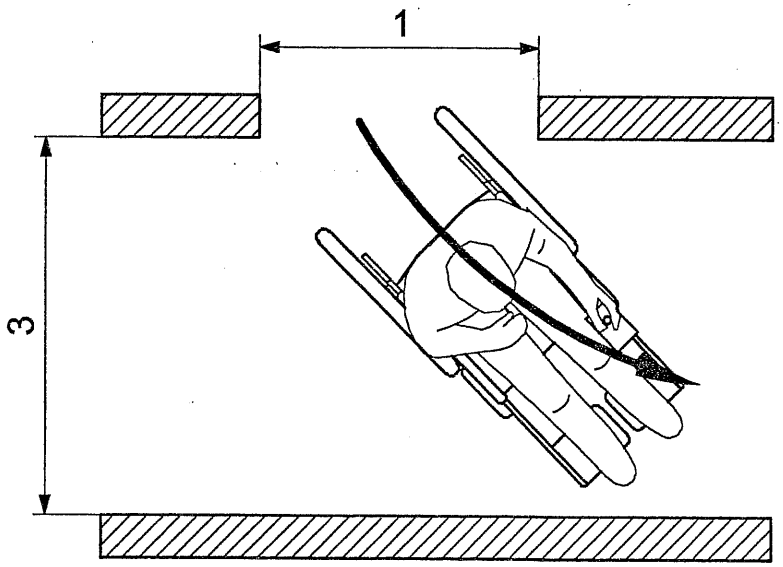

b) entering

Key

1 800 mm wide side opening
2 required corridor width for side opening when exiting
3 required corridor width for side opening when entering

Figure 13 — Required corridor width for side opening

© ISO 2008 – All rights reserved

3.24
required doorway entry depth
minimum distance between the wall containing the door and the most remote point of the wheelchair when opening an 800 mm wide door that is located 600 mm from the side wall

See Figure 14.

NOTE Measurement is in accordance with 8.16.

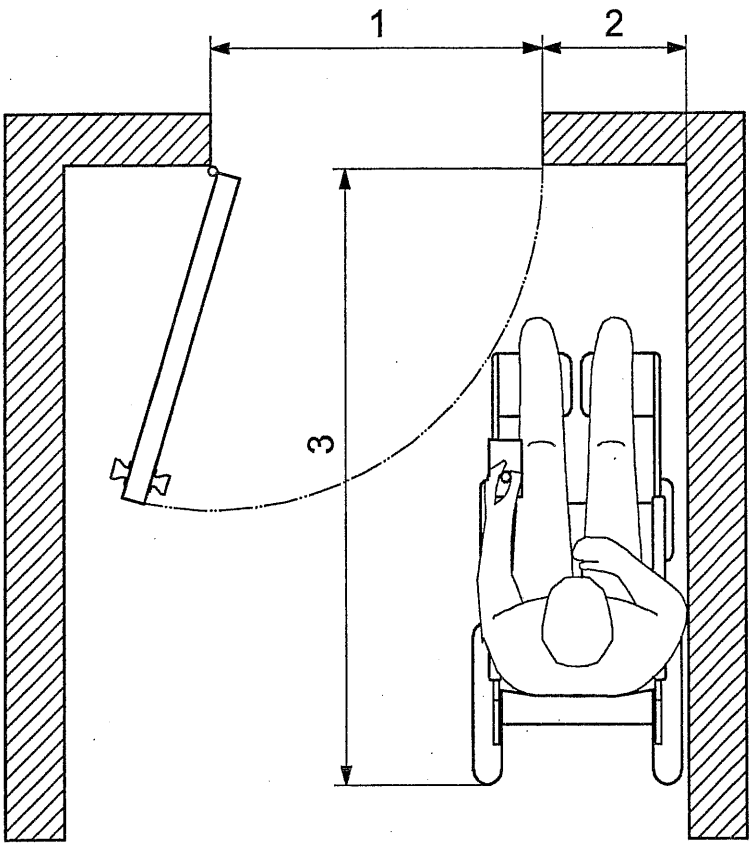

Key

1 800 mm wide door opening
2 600 mm side distance
3 required doorway entry depth

Figure 14 — Required doorway entry depth

標準檢驗局
內部公務使用

© ISO 2008 – All rights reserved

3.25
required width of angled corridor
minimum width of a corridor with a right angled turn in which the wheelchair can be driven in both forward and rearward directions

See Figure 15.

NOTE Measurement is in accordance with 8.15.

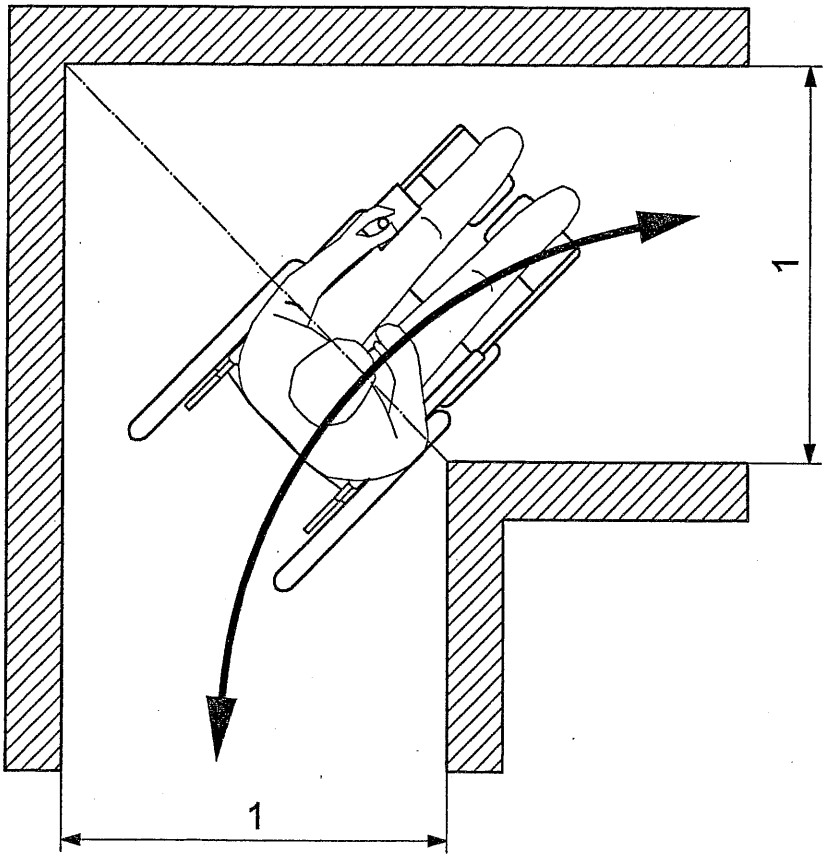

Key:

1 required width of angled corridor

Figure 15 — Required width of angled corridor

標準檢驗局
內部公務使用

© ISO 2008 – All rights reserved

標準檢驗局
內部公務使用

3.26
reversing width
minimum distance between two vertical and parallel walls between which the wheelchair with direct steering or limited differential steering can turn through 180° with one initial forward drive, one rearward drive and one final forward drive (i.e. a three-point turn)

See Figure 16 and Clause B.3.

NOTE Measurement is in accordance with 8.12.

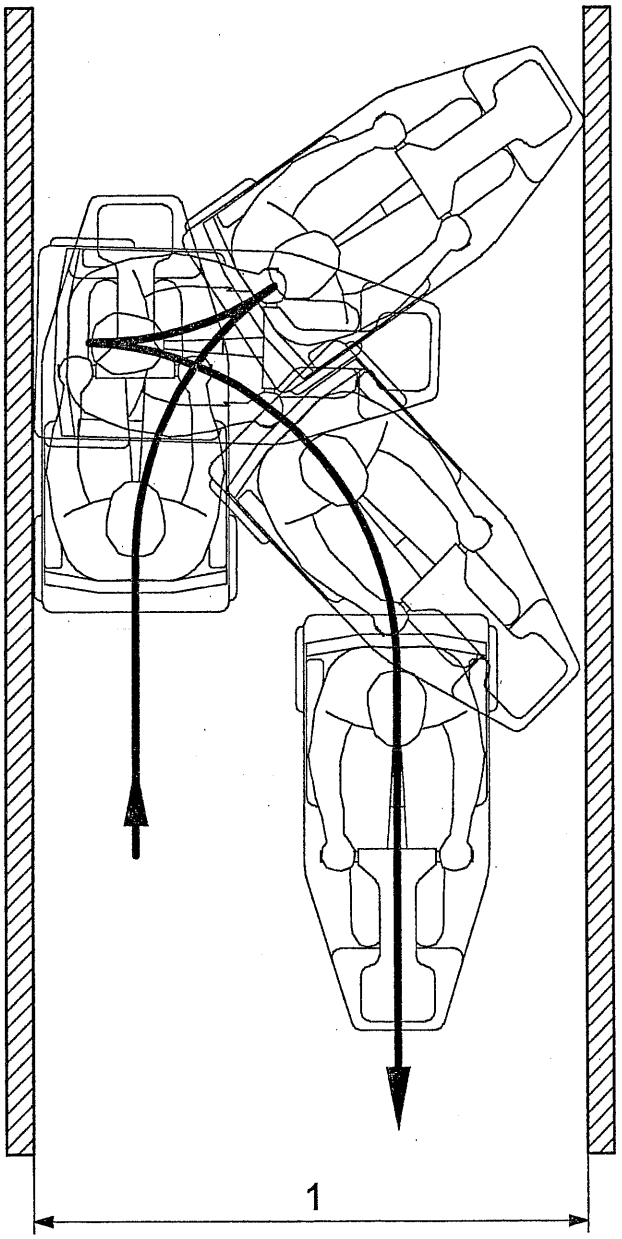

Key

1 reversing width

Figure 16 — Reversing width (example with scooter)

© ISO 2008 – All rights reserved

標準檢驗局
內部公務使用

3.27
rising
distance between the ground and the lowermost point of the front wheels when the anti-tip devices are in contact with the ground

See Figure 17.

NOTE Measurement is in accordance with 8.8.

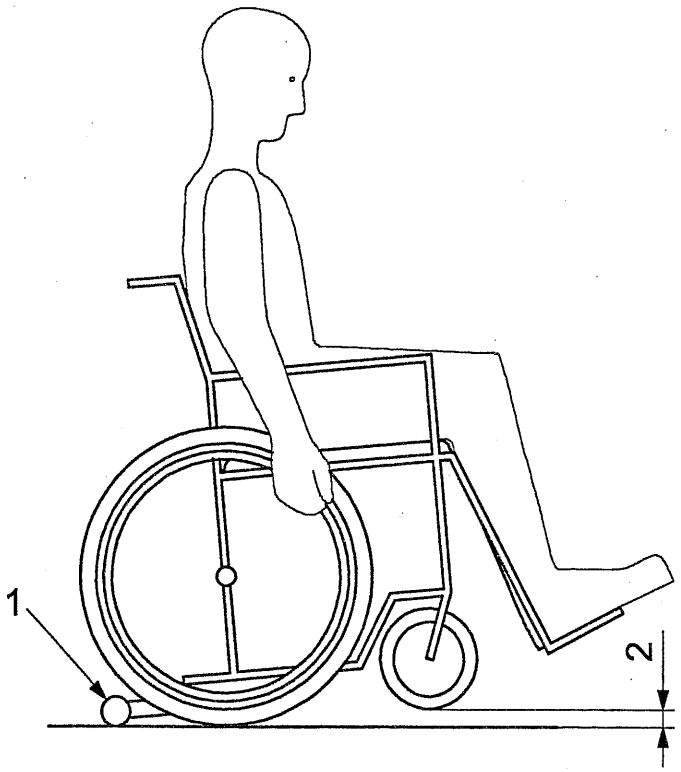

Key
1 anti-tip device contacting the ground
2 rising

Figure 17 — Rising

© ISO 2008 – All rights reserved

3.28
skew
relative position of a pair of fixed wheels, where one wheel is ahead of the other

See Figure 18.

NOTE 1 Measurement is in accordance with A.18.

NOTE 2 A non-zero value usually indicates a misalignment. The value is positive if the left wheel is located in front of the right wheel, zero is the desired neutral position, and is negative if the right wheel is located in front of the left wheel.

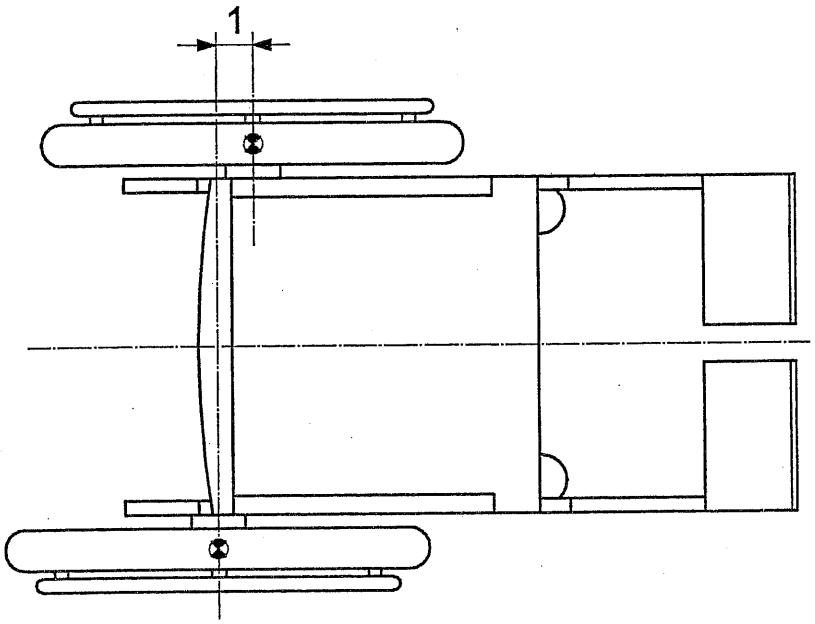

Key

1 Skew

Figure 18 — Skew (exaggerated)

標準檢驗局
內部公務使用

© ISO 2008 – All rights reserved

標準檢驗局
內部公務使用

3.29
wheel median line
imaginary circle, having the same diameter as a wheel, which passes through the ground contact point of the wheel as the wheel is rotated

See Figure 19.

NOTE If the wheel is a torus, the wheel median line runs around the wheel at its greatest diameter. If the wheel is a cylinder, the wheel median line is at the half width of the surface. In case of a twin wheel, the wheel median line is in the middle of the two wheels (on the same hub).

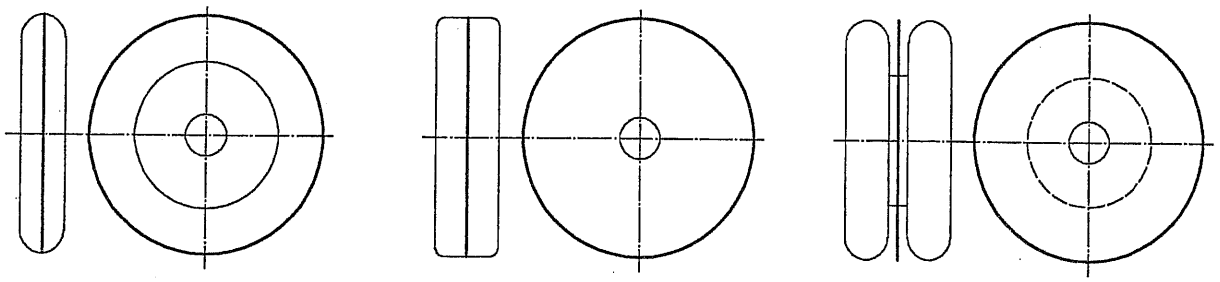

a) wheel median line of a torus wheel **b) wheel median line of a cylindrical wheel** **c) wheel median line of a twin wheel**

Figure 19 — Wheel median line

3.30
wheelbase
longitudinal distance between the ground contact points of the front and rear wheels with any castor wheels in the forward trailing position

See Figure 20.

NOTE 1 Measurement is in accordance with A.13.

NOTE 2 Sketch is a side view.

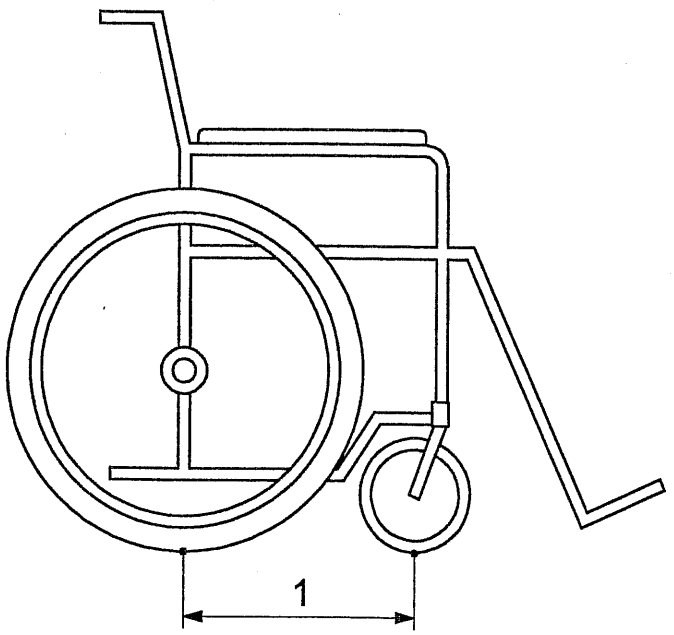

Key
1 wheelbase

Figure 20 — Wheelbase

© ISO 2008 – All rights reserved

標準檢驗局
內部公務使用

3.31
wheelchair centre-point
midpoint of the line between the centres of the fixed wheels

See Figure 21 and Annex D.

NOTE If there is only one fixed wheel, the wheelchair centre-point is at the midpoint of that wheel; if there is more than one axis with fixed wheels, the wheelchair centre-point is on the axis with the larger wheel diameters; if all fixed wheels have the same diameter, the wheelchair centre-point is on the axis that bears the higher proportion of load of the occupied wheelchair.

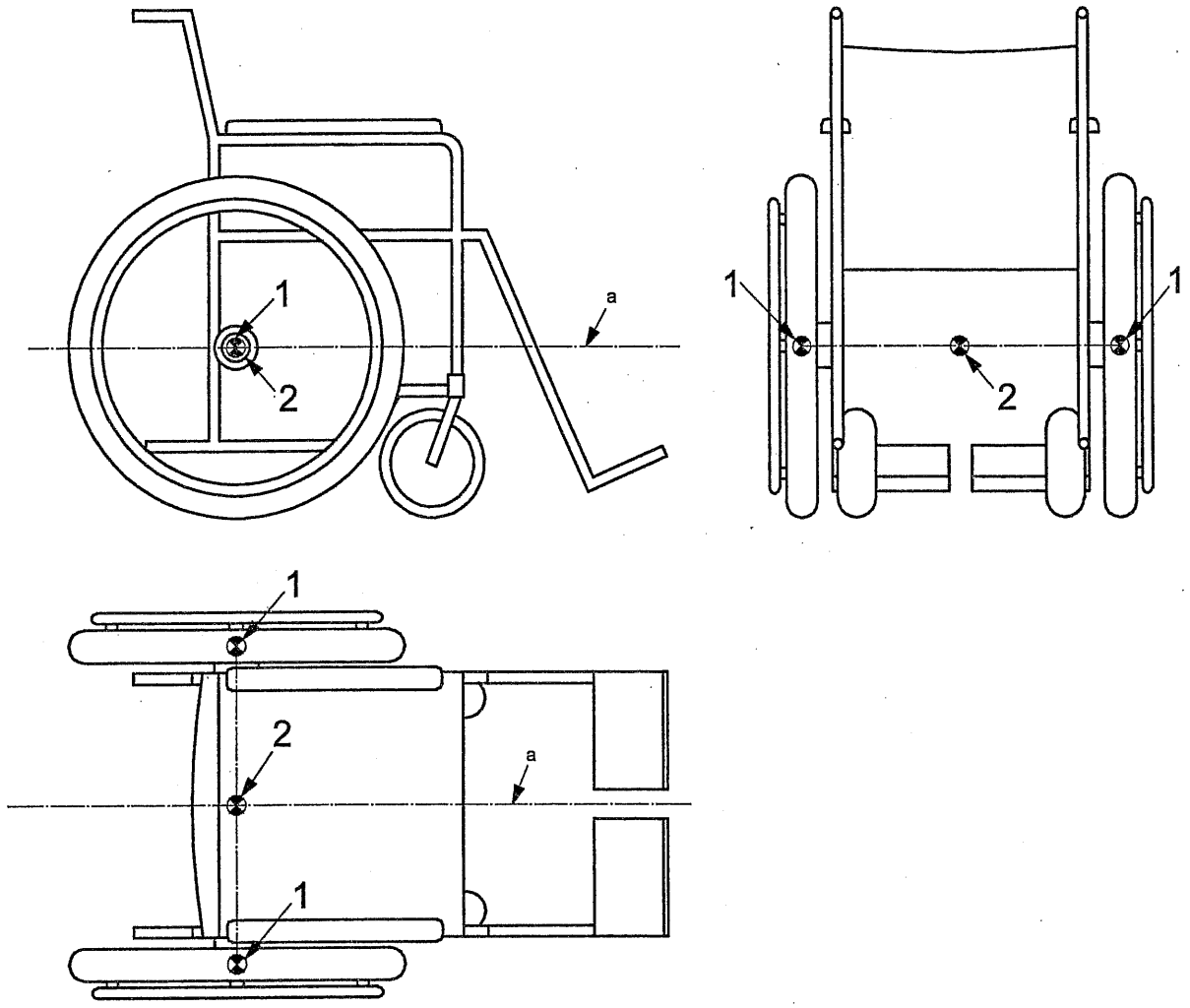

Key

1 centre of fixed wheel

2 wheelchair centre-point

a Wheelchair longitudinal axis.

Figure 21 — Wheelchair centre-point and wheelchair longitudinal axis

© ISO 2008 – All rights reserved

3.32
wheelchair longitudinal axis
imaginary horizontal line through the wheelchair centre-point, running in the direction of straight forward/rearward travel

See Figure 21 and Annex D.

標準檢驗局
內部公務使用

4 Wheelchair classes and occupant mass groups

4.1 General

The dimensions of a wheelchair are mainly influenced by its class (electrically powered wheelchairs only) and by its intended occupant mass group.

4.2 Classes of electrically powered wheelchairs

Electrically powered wheelchairs are classified in one or more of the following three classes, dependant upon their intended field of use.

— **Class A**: compact, manoeuvrable wheelchair not necessarily capable of negotiating outdoor obstacles.

— **Class B**: wheelchair sufficiently compact and manoeuvrable for some indoor environments and capable of negotiating some outdoor obstacles.

— **Class C**: wheelchair, usually larger in size, not necessarily intended for indoor use but capable of travelling over longer distances and negotiating outdoor obstacles.

NOTE 1 Typically, class A wheelchairs are intended to be used primarily indoors, class B wheelchairs are intended to be used both indoors and outdoors and class C wheelchairs are intended to be used primarily outdoors.

NOTE 2 Scooters are included in the classes above.

4.3 Occupant mass groups

Wheelchairs are intended for one of the following three wheelchair occupant mass groups:

— **Occupant mass group I**: occupant with a mass below 50 kg.

— **Occupant mass group II**: occupant with a mass between 50 kg and 125 kg.

— **Occupant mass group III**: occupant with a mass above 125 kg.

5 Test apparatus

5.1 Test plane, rigid horizontal plane of sufficient size to accommodate the wheelchair and the adjustable barriers (5.2) during testing, such that the whole surface is sufficiently flat that it is contained between two imaginary horizontal parallel planes 5 mm apart per 1 000 mm and 25 mm apart per 6 000 mm, with a coefficient of friction conforming to ISO 7176-13.

5.2 Adjustable barriers, vertical planes capable of touching or detecting the outer dimensions and the operating area of the wheelchair on the test plane, such that the plane of each barrier is sufficiently flat that it is contained between two imaginary vertical parallel planes 5 mm apart per 1 000 mm.

EXAMPLES Physical planes, light beams or any other appropriate means for providing a flat and vertical plane.

5.3 Test dummy, conforming to ISO 7176-11, modified as follows: replace the lower leg portions of the test dummies with two foot space gauges, each having a shape as indicated in Figure 22 and a mass of 2 kg ± 0,5 kg for occupant mass group I and of 3,5 kg ± 0,5 kg for occupant mass groups II and III.

© ISO 2008 – All rights reserved

Dimensions in millimetres

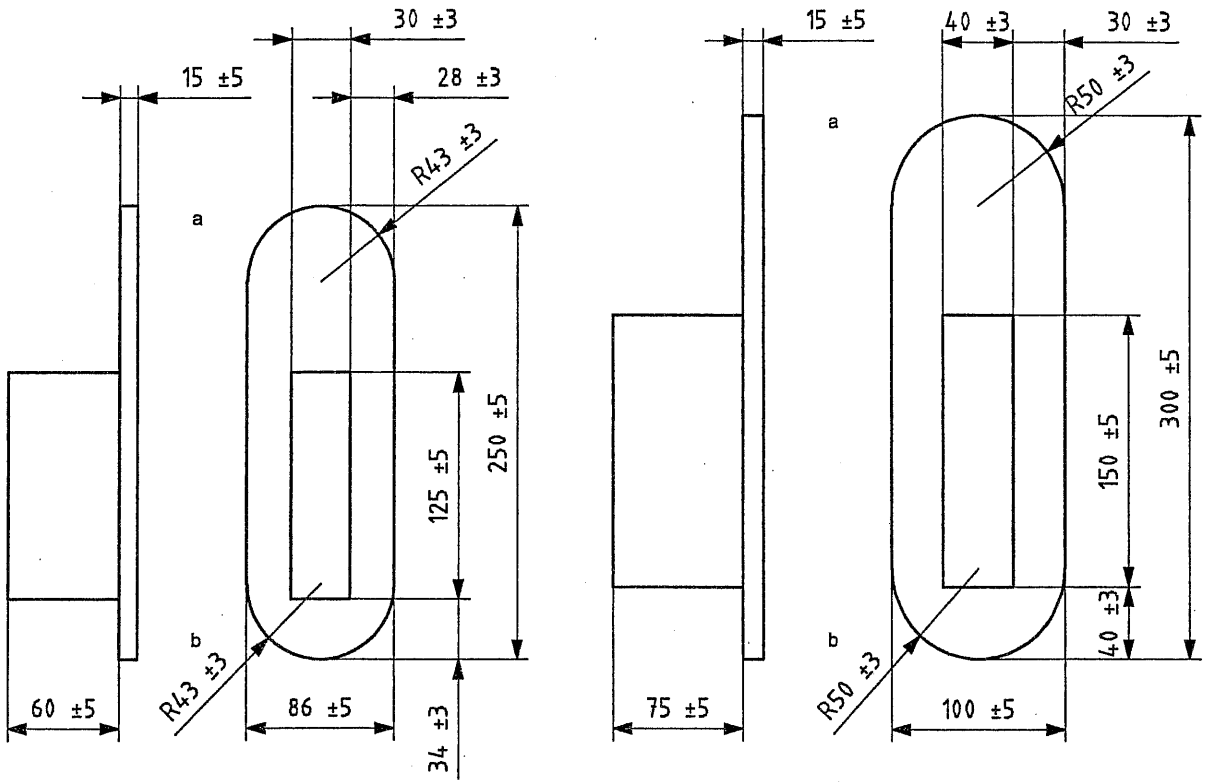

a) occupant mass group I **b) occupant mass groups II and III**

Key

a Front.

b Heel.

NOTE 1 Pieces of plywood, 15 mm ± 5 mm thick, attached to steel blocks may be used.

NOTE 2 Sketches in top view with the front of the foot pointing to the top

標準檢驗局
內部公務使用

Figure 22 — Foot space gauges

5.4 Knee space gauge, substituting the reference occupant's knees and which:

— has a shape as indicated in Figure 23;

— adds to the respective test dummy's lap section to achieve a total length of 520 mm ± 3 mm for occupant mass group I and 650 mm ± 3 mm for occupant mass groups II and III when measured parallel to the seat plane and between the most forward point of the knee space gauge and the intersection point of the seat plane with the back support plane of the test dummy;

— has a width of 270 mm ± 3 mm for occupant mass group I, 340 mm ± 3 mm for occupant mass group II and 390 mm ± 3 mm for occupant mass group III;

— has a radius of 50 mm ± 2 mm for occupant mass group I and 60 mm ± 2 mm for occupant mass groups II and III.

NOTE 1 A piece of plywood, 15 mm ± 5 mm thick, may be used.

NOTE 2 Dimensions are in accordance with DIN 33402[3] and ISO 7176-11.

© ISO 2008 – All rights reserved

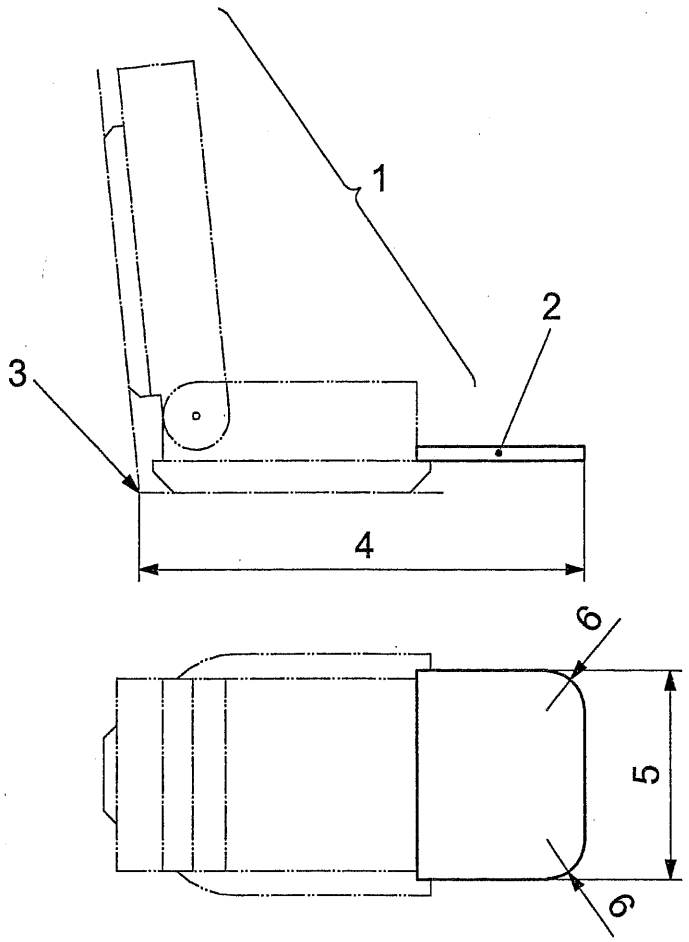

Key

1 test dummy
2 knee space gauge
3 intersection point of seat plane with back support plane of test dummy
4 total length of dummy including knee space gauge
5 width
6 radius

Figure 23 — Knee space gauge

5.5 Length measuring device, means for measuring linear dimensions in increments of 0,5 mm in the range of 0 mm to 150 mm, in increments of 1 mm in the range of 150 mm to 2 000 mm and in increments of 2 mm in the range of 2 000 mm to 5 000 mm.

5.6 Hand space gauges, means of substituting the reference occupant's hands on the handrims. They shall add 75 mm ± 1 mm to each handrim in a radial direction and 50 mm ± 1 mm in a lateral direction when measured at the top (see Figure 24). They shall extend at least 30° in the rearward direction and 60° in the forward direction when measured from the top of the handrim.

EXAMPLE A piece of flexible material that bends around the handrim.

標準檢驗局
內部公務使用

© ISO 2008 – All rights reserved

Dimensions in millimetres

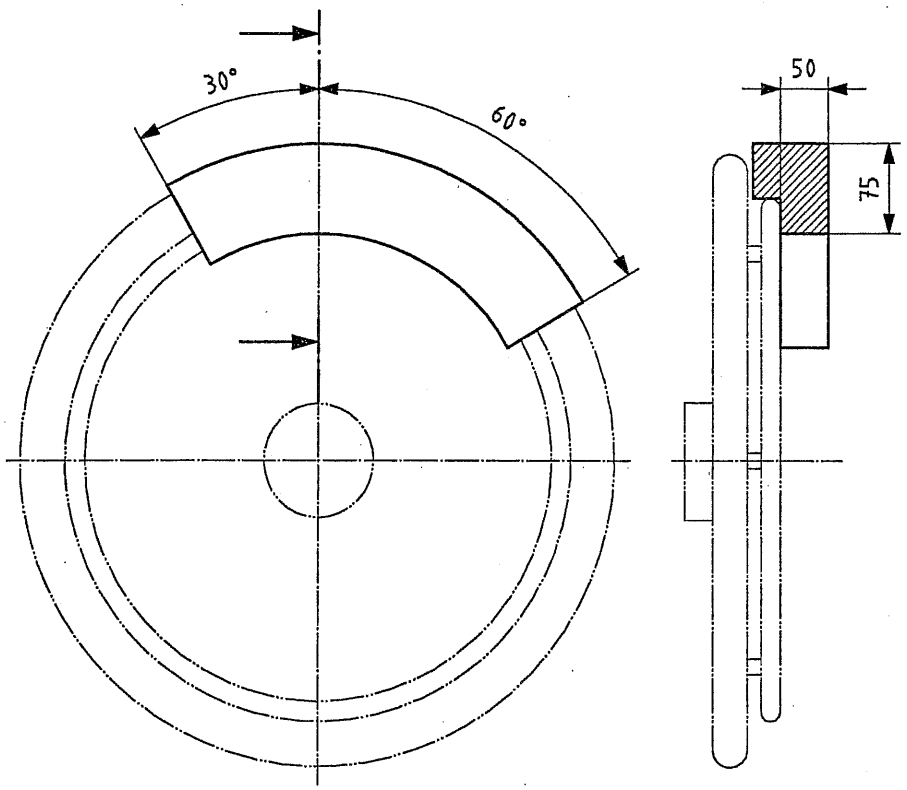

NOTE In the side view of the wheel, the forward direction is to the right.

Figure 24 — Hand space gauge

5.7 Right angle, means of establishing a straight edge normal to the test plane, to an accuracy of ± 1 mm per 1 000 mm.

EXAMPLE Engineers' square, sheet-metal square.

5.8 Deviation identification device, capable of identifying both radial and lateral deviation of a wheel or handrim.

NOTE Radial deviation of a wheel or handrim is its deviation from a true circle that is concentric to its axis and lateral deviation of a wheel or handrim is its deviation from a plane that is perpendicular to its axis.

EXAMPLE A rack placed on the test plane equipped with a piece of chalk, felt pen or micro switch with roller actuator.

5.9 Ramp gauge A, flat rectangular piece of rigid material about 500 mm × 500 mm and 2 mm ± 0,5 mm thick.

標準檢驗局
內部公務使用

© ISO 2008 – All rights reserved

5.10 Ramp gauge B, two flat rectangular pieces of rigid material about 500 mm × 500 mm and 2 mm ± 0,5 mm thick and hinged together at one edge (see Figure 25).

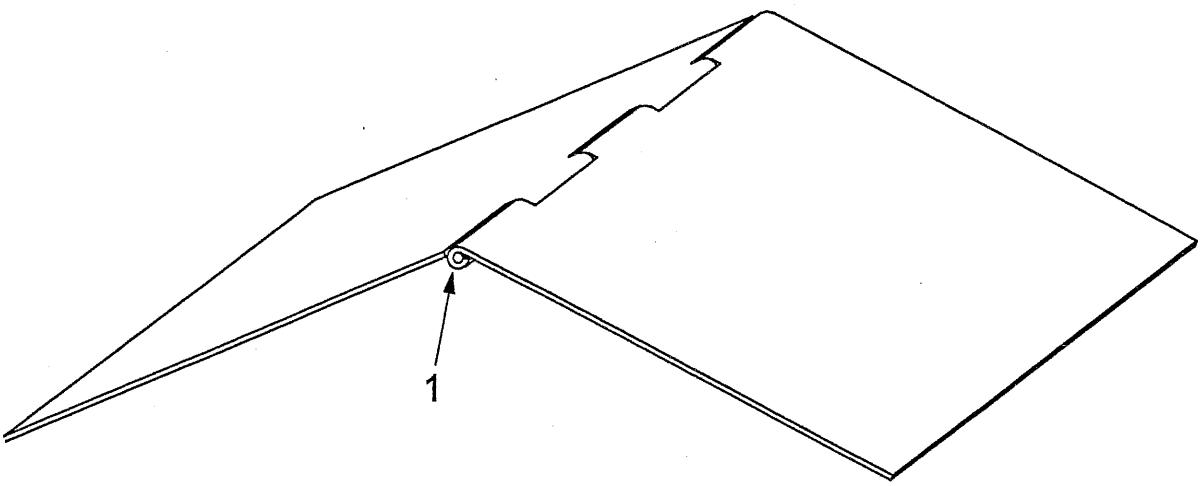

Key

1 hinge

Figure 25 — Ramp gauge B (example)

5.11 Angle measuring device, means for measuring angles to an accuracy of ± 0,5°.

5.12 Castor axis indicator, means of establishing a line parallel to the castor axis.

NOTE See example in Figures A.5 and A.6.

5.13 Mass measuring device, means for measuring masses to an accuracy of ± 0,2 kg.

5.14 Test environment, environment within which the tests are conducted at an ambient temperature of 20°C ± 5°C.

標準檢驗局
內部公務使用

6 Selection of the test wheelchair

The wheelchair selected for test purposes shall be drawn from normal production.

Pre-production units may be used provided they have the intended production dimensions.

For the purpose of allowing comparison between different wheelchair models, reference set-up values are specified for each of the three occupant mass groups I, II and III. These reference set-up values shall be used when selecting a wheelchair whose dimensions need to be specified when ordering/purchasing the wheelchair but cannot be adjusted later.

NOTE Seat depth, seat width, back support height, etc. are examples for dimensions that usually need to be selected when ordering/purchasing the wheelchair.

Select a wheelchair with nominal dimensions:

— according to the reference set-up values specified in Table 1 (see 7.3.1) for wheelchairs with handrims;

— according to the reference set-up values specified in Table 2 (see 7.3.2) for wheelchairs without handrims.

If the correct dimensions are not available, dimensions as close as possible to the reference set-up values shall be used.

© ISO 2008 – All rights reserved

Record the actual dimensions of the test wheelchair. Record any deviation from the specifications in Clause 8 and reasons for deviation.

標準檢驗局
內部公務使用

7 Preparation of the test wheelchair

7.1 General

When a particular test procedure has specific set-up requirements, use the set-up procedure specified in that particular test procedure. All other set-up procedures shall be carried out in accordance with 7.2 to 7.9.

7.2 Wheelchair equipment

The wheelchair shall be ready for use if the body support system or any of its features is available in various options: a sling seat, a sling back support, two removable full-length arm supports and two separated, removable, angle adjustable foot support assemblies with anterior heel supports shall be fitted. If any of these options is not available, choose those options recommended by the manufacturer and record this in the test report.

If the wheelchair can be delivered with wheels of various diameters, select the wheel diameter recommended by the manufacturer. If there is no recommendation, select the largest diameter.

If the wheelchair can be delivered with anti-tip devices and/or kerb-climbing devices, these devices shall be used.

Unless they are an integral part of the body support system, postural support device components such as head supports, any loose seat cushions, etc. shall be removed.

NOTE Removable seat cushions that are provided with the wheelchair, are necessary for normal use, and that are fixed with hook and loop fasteners, should not be considered loose and should not be removed.

The wheelchair shall not be equipped with any accessories.

7.3 Wheelchair adjustment

7.3.1 Wheelchairs with handrims

NOTE Wheelchairs with handrims comprise wheelchairs with manual handrim propulsion and handrim activated power assisted wheelchairs (HAPAW).

Set any adjustable dimensions of the wheelchair as close as possible to the reference set-up values specified in Table 1 with an accuracy of ± 3 mm or ± 1°, except where otherwise stated.

If the reference set-up value is not available/possible, adjust the dimension to the nearest greater value, or, if this value is also not available/possible, adjust as close as possible to the reference set-up value.

Adjust any anti-tip devices as recommended by the manufacturer. If there is no recommendation, adjust so that it is as close as possible to the following position.

— Set the rising (see 3.27) to 25 mm ± 3 mm.

— When the wheelchair is standing on level ground the anti-tippers protrude to the rear as far as possible.

— If it is not possible to achieve both settings at one time, give priority to the setting of the rising.

— If the manufacturer recommends more than one setting, use the recommended setting closest to these default settings.

© ISO 2008 – All rights reserved

If any of the adjustments results in an unwanted setting, e.g. the castor wheels contact any other part of the wheelchair, increase/decrease the adjustment just enough to ensure a proper function of the wheelchair and record the actual dimension together with the reason.

7.3.2 Wheelchairs without handrims

NOTE Wheelchairs without handrims comprise electrically powered wheelchairs and manual wheelchairs with lever propulsion and push wheelchairs.

Set any adjustable dimensions of the wheelchair as close as possible to the reference set-up values specified in Table 2 with an accuracy of ± 3 mm or ± 1°, except where otherwise stated.

If the reference set-up value is not available/possible, adjust the dimension to the nearest greater value, or, if this value is also not available/possible, adjust as close as possible to the reference set-up value.

Adjust any anti-tip devices as recommended by the manufacturer. If there is no recommendation, adjust so that it is as close as possible to the following position.

— Set the rising (see 3.27) to 50 mm ± 3 mm.

— When the wheelchair is standing on level ground the anti-tippers protrude to the rear as far as possible.

— If it is not possible to achieve both settings at one time, give priority to the setting of the rising.

— If the manufacturer recommends more than one setting, use the recommended setting closest to these default settings.

Adjust any kerb-climbing devices to their working position as recommended by the manufacturer.

In the case of scooters, adjust the horizontal distance between the tiller and the back support as recommended by the manufacturer. If there is no recommendation, adjust as close as possible to 640 mm ± 25 mm for scooters intended for occupant mass group II or III and to 460 mm ± 25 mm for scooters intended for occupant mass group I. If more than one setting is recommended, use the recommended setting that is closest to these preferred settings.

In the case of manual wheelchairs with lever propulsion, adjust the lever(s) to their maximum length and sideways position as recommended by the manufacturer. Then position them as follows:

— when during measurement the wheelchair is stationary (see 8.2 to 8.10 and Clauses A.2 to A.22), position the lever(s) at their extreme points of movement; if there is only one lever, position it at its most forward point of movement;

— when, during measurement, the wheelchair is in motion (see 8.11 to 8.17), move the lever(s) between their extreme points of movement.

If any of the adjustments results in an unwanted setting, e.g. the wheels contacting any other part of the wheelchair, increase/decrease the adjustment just enough to ensure a proper function of the wheelchair and record the actual dimension together with the reason for the change.

標準檢驗局
內部公務使用

© ISO 2008 – All rights reserved

Table 1 — Reference set-up values for wheelchairs with handrims

Item Differing terms used in ISO 7176-7 and ISO 7176-22 are given in [brackets].	Reference set-up values Occupant mass group I (< 50 kg)	II (50 to 125 kg)	III (> 125 kg)
Seat plane angle (degrees)	4	4	4
Effective seat depth (millimetres)	340	450	450
Effective seat width [a] (millimetres)	320	450	500
Seat surface height at front edge (millimetres)	470	520	520
Back support angle [backrest angle] (degrees)	10	10	10
Back support height [backrest height] (millimetres)	340	420	420
Handgrip height (millimetres)	820	950	950
Back support width [backrest width] (millimetres)	320	450	500
Footrest to seat (millimetres)	340	450	450
BUT NO LESS THAN: Footrest clearance (millimetres)	50	40	40
Footrest length (millimetres)	150	150	150
Footrest to leg angle (degrees)	90	90	90
Leg to seat surface angle (degrees)	90	97	97
Armrest height (millimetres)	160	200	200
Front of armrest to back support [front of armrest to backrest] (millimetres)	200	320	320
Handrim diameter (millimetres)	490	530	530
Manoeuvring wheel diameter [propelling wheel diameter] (millimetres)	560	610	610
Wheelbase (millimetres)	340	400	400
Camber (degrees)	–3	0	0
Horizontal location of wheel axle (millimetres)	20	20	20
Vertical location of wheel axle (millimetres)	166	184	184
Castor wheel diameter (millimetres)	150	175	175
Castor trail (millimetres)	35	50	50
Track of drive wheel or manoeuvring wheels [drive wheel track width]	mid-position		
Track of castor wheels or pivot wheels [castor wheel track width]	mid-position		
Movable wheel, horizontal position [castor stem housing position, horizontal]	mid-position		
Movable wheel, vertical position [castor stem housing position, vertical]	mid-position		
Movable wheel, vertical axle position [castor wheel axle position, vertical]	mid-position		
Castor rake [castor stem angle, fore-aft plane] (degrees)	vertical +1 / –0		
Castor cant [castor stem angle, lateral plane] (degrees)	vertical ± 0,5		

[a] Since the nominal seat width (as measured in ISO 7176-7 as "seat width") is measured in various ways the results are not comparable. Therefore, the effective seat width is used as the reference value since this dimension both provides reliable comparison between the values and meets the occupant's real needs.

[b] These adjustments are used only when they do not conflict with any seating adjustments.

標準檢驗局
內部公務使用

© ISO 2008 – All rights reserved

Table 2 — Reference set-up values for wheelchairs without handrims

Item Differing terms used in ISO 7176-7 and ISO 7176-22 are given in [brackets].	Reference set-up values Occupant mass group I (< 50 kg)	II (50 to 125 kg)	III (> 125 kg)
Seat plane angle (degrees)	4	4	4
Effective seat depth (millimetres)	340	450	450
Effective seat width [a] (millimetres)	340	470	520
Seat surface height at front edge (millimetres)	470	520	520
Back support angle [backrest angle] (degrees)	10	10	10
Back support height [backrest height] (millimetres)	400	500	500
Handgrip height (millimetres)	820	950	950
Back support width [backrest width] (millimetres)	340	470	520
Footrest to seat (millimetres)	340	450	450
BUT NO LESS THAN: Footrest clearance (millimetres)	50	40	40
Footrest length (millimetres)	150	150	150
Footrest to leg angle (degrees)	90	90	90
Leg to seat surface angle (degrees)	90	97	97
Armrest height (millimetres)	160	200	200
Front of armrest to back support [front of armrest to backrest] (millimetres)	200	320	320
Diameter of fixed wheels [propelling wheel diameter]	largest diameter		
Fixed wheel, horizontal position [drive wheel axle position, horizontal]	mid-position [c]		
Fixed wheel, vertical position [drive wheel axle position, vertical]	mid-position		
Fixed wheel camber [drive wheel camber] (degrees)	0		
Track of drive wheel or manoeuvring wheels [drive wheel track width]	mid-position		
Diameter of movable wheels [castor wheel diameter]	largest diameter		
Movable wheel, horizontal position [castor stem housing position, horizontal]	mid-position [c]		
Movable wheel, vertical position [castor stem housing position, vertical]	mid-position		
Movable wheel, vertical axle position [castor wheel axle position, vertical]	mid-position		
Track of castor wheels or pivot wheels [castor wheel track width]	mid-position		
Castor rake [castor stem angle, fore-aft plane] (degrees)	vertical +1 / −0		
Castor cant [castor stem angle, lateral plane] (degrees)	vertical ± 0,5		
Castor trail (millimetres)	50		

[a] Since the nominal seat width (as measured in ISO 7176-7 as "seat width") is measured in various ways the results are not comparable. Therefore, the effective seat width is used as the reference value since this dimension both provides good comparability of the values and responds to the occupant's needs.

[b] These adjustments are used only when they do not conflict with any seating adjustments.

[c] If the mid-position is not available/possible, set to the nearest position which provides a longer wheelbase than the mid-position.

標準檢驗局
內部公務使用

© ISO 2008 – All rights reserved

標準檢驗局
內部公務使用

7.3.3 Electrical equipment

7.3.3.1 Batteries

If the wheelchair is electrically powered, fit it with batteries of size and type recommended by the manufacturer. Charge the batteries to at least 75 % of their rated nominal capacity.

WARNING If the wheelchair is equipped with liquid-electrolyte-type batteries, some tests can be hazardous and there is a risk of spillage. In such a case, the batteries may be replaced by the nearest equivalent gel or sealed batteries, with supplementary weights to give equivalent mass distribution.

7.3.3.2 Mounting of control devices

For electrically powered wheelchairs with a control device that can be placed in different positions in space, set it to the mid-position for right handed use. Where there is no provision for this position, use the position that gives the mid-setting furthest away from the armrest.

7.3.3.3 Electrical settings

Set the control device to the manufacturer's recommended setting. If there is no recommended setting, set to the maximum speed.

7.3.3.4 Other electrical control devices

Set any other electrical control devices that do not require the use of tools, and do not change previous adjustments in 7.3, to the manufacturer's recommended position. If there is no recommended position for any such controls, set them to the mid-position.

7.3.4 Other adjustable components

Set mechanically adjustable components of the wheelchair, which are not covered by Table 1 or Table 2, to the mid-position of their range with an accuracy of ± 3 mm. Where there is no mid-position, set them to the position that gives the nearest longer, wider and/or higher measurement.

7.3.5 Pneumatic tyres

If the wheelchair has pneumatic tyres, inflate them to the pressure recommended by the wheelchair manufacturer. If a pressure range is given, inflate to the highest pressure in the range. If there is no recommendation for inflation pressure from the wheelchair manufacturer, inflate the tyres to the maximum pressure recommended by the tyre manufacturer.

7.3.6 Parking brakes

Some of the adjustments can have influences on the function of the brakes, e.g. if the brake block does not maintain contact with its surface when adjusting the position of the wheel. If the brakes are adjustable and there are no manufacturer's instructions for adjustments, measure the distances between the brake blocks and their contact surfaces when the brakes are in their released position. Record the distance.

NOTE This distance is used when resetting the brakes in the final adjustments (see 7.3.7).

7.3.7 Final adjustments

After completing the requirements in 7.3.1 to 7.3.6, make the following final adjustments with priority given to those last in the list, but not in conflict with the manufacturer's instructions.

© ISO 2008 – All rights reserved

標準檢驗局
內部公務使用

If necessary, adjust the back support angle and the seat plane angle, without changing any wheel position, to the reference set-up values specified in Table 1 or Table 2. If these angles are not available/possible, adjust the dimension to the nearest greater value, or, if this value also is not available/possible, adjust as close as possible to the reference set-up value.

If necessary, adjust the castor rake to vertical with a tolerance of +1° / 0° or, if this is not possible, to the position nearest to vertical in the positive direction. No castor cant is allowed.

If the parking brakes are adjustable, adjust the parking brakes as specified by the manufacturer. If there are no manufacturer's specifications, adjust the brakes in accordance with the measurements taken in 7.3.6.

7.4 Final check

After the procedures in 7.2 and 7.3 have been completed, ensure that all fasteners disturbed during adjustment are tightened in accordance with the manufacturer's recommendations. If there are no manufacturer's recommendations, adjust in accordance with ISO 7176-22:2000, Annex B.

7.5 Positioning

Place the wheelchair on the test plane. Prepare the wheelchair for driving as specified by the manufacturer. Set any movable wheels in their trailing position for forward straight ahead movement.

7.6 Loading of the wheelchair

7.6.1 General

Some test methods described in this part of ISO 7176 require that the wheelchair be loaded while other test methods are performed with the wheelchair unloaded. If a particular test method requires the wheelchair to be loaded, the load may either be a test dummy or, if permitted in the particular test method, a human test person.

7.6.2 Test dummy

If it is specified for a particular test that the wheelchair shall be loaded, the test dummy specified in 5.3 shall be used.

Perform the positioning of the test dummy as specified in ISO 7176-22:2000, Clause 9, with the following changes.

— Replace Table 1 of ISO 7176-22:2000 by Table 3 below.

Table 3 — Selection of test dummy mass

Maximum occupant mass kg	Test dummy mass kg
⩽ 50	50
> 50 to 75	75
> 75	100

NOTE This part of ISO 7176 does not call for any performance tests. Therefore, a maximum test dummy mass of 100 kg is deemed to be sufficient to load the wheelchair, even for wheelchairs with higher rated loads.

— If the wheelchair has two separate foot supports, position the two appropriate foot space gauges (see 5.3) in a lateral direction parallel and centrally on each foot support.

— If the wheelchair has a one-piece foot support, position the two appropriate foot space gauges in a lateral direction parallel to and at a distance of 10 cm ± 2 cm from either side of the centre line of the foot support.

© ISO 2008 – All rights reserved

— Position the foot space gauges on the foot supports in the fore/aft direction as specified in Figure 26. If this position of the feet of the test dummy is not possible or if there is an indication that it would give an unrealistic seating position for a human test person, correct to a possible and realistic position and record the position and the reason why it was necessary.

— In case of tubular foot supports, align the foot space gauges at 15° ± 1° to the horizontal (see Figure 26).

— Clamp the foot space gauges to the foot support(s), or drill holes no greater than 8 mm in diameter in the foot support(s) and bolt the foot space gauges on.

Dimensions in millimetres

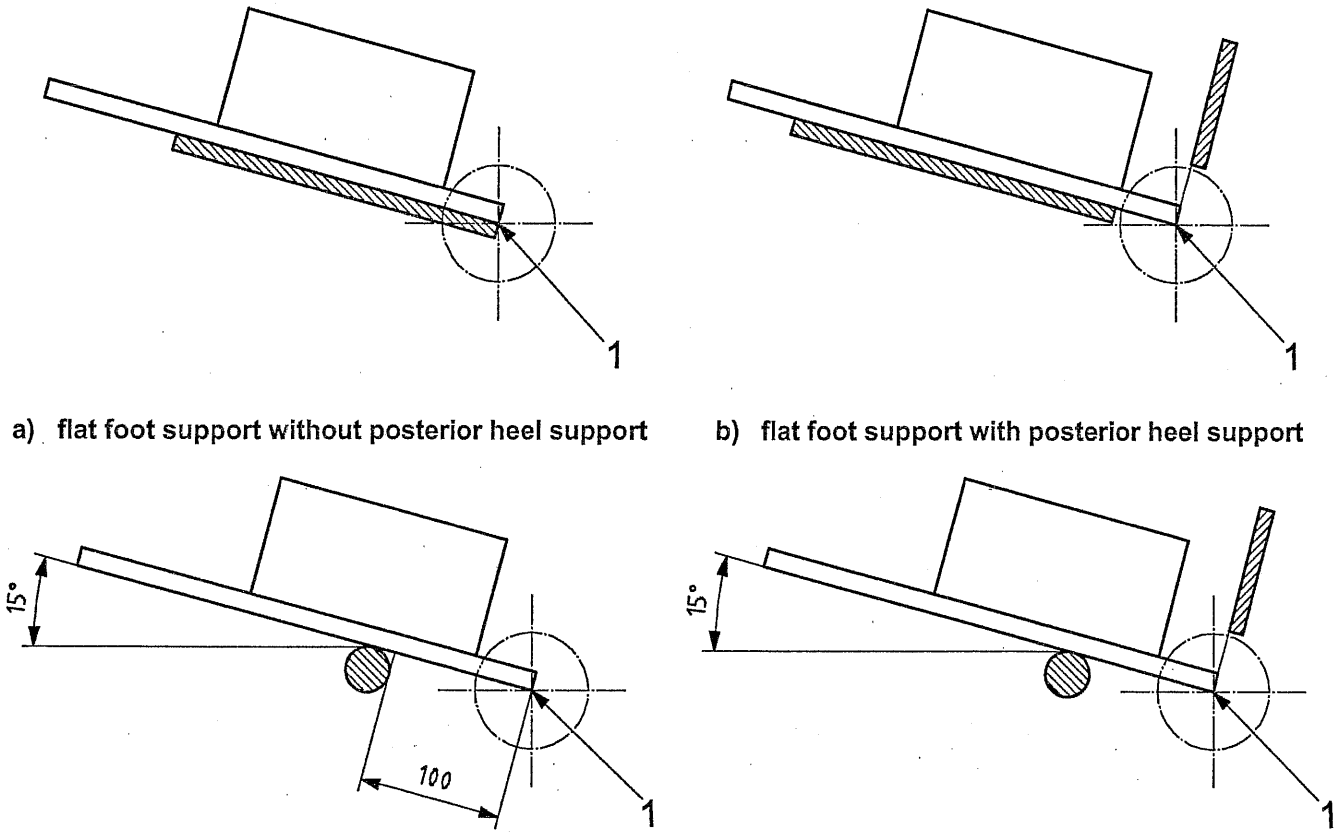

a) **flat foot support without posterior heel support**

b) **flat foot support with posterior heel support**

c) **tubular foot support without posterior heel support**

d) **tubular foot support with posterior heel support**

Key

1 alignment point

Figure 26 — Position of the foot space gauges on various foot supports

7.6.3 Human test person

If it is specified for a particular test that the dummy may be replaced by a human test driver, a human test person may be used. In this case, add weights, such as sandbags, to a vest or garment, etc. worn by the test person to supplement any lower mass and to maintain its location of centre of gravity so that it is as similar as possible to that of the appropriately positioned test dummy. Place the test person's feet on the foot supports with the front part of the foot (shoe) at the same place where the forward ends of appropriate foot space gauges would be when they were properly positioned as specified above.

標準檢驗局
內部公務使用

© ISO 2008 – All rights reserved

NOTE To determine the correct location of centre of mass of a human driver, the weight distribution of the wheelchair with the seated driver (plus additional weights, if used) can be compared with the weight distribution of the wheelchair with the dummy fitted to the body support system as specified in ISO 7176-22.

WARNING — It is essential that appropriate precautions be taken to ensure the test personnel's safety.

7.7 Records

Record the actual settings or adjustments of the test wheelchair (7.2 to 7.6). Record any deviation from the specifications in 7.2 to 7.6 and the reasons for the deviations.

7.8 Use of hand space gauge and foot space gauges

If it is specified for a particular test, the hand space gauge shall be used for wheelchairs that have handrims.

If it is specified for a particular test, foot space gauges shall be used.

7.9 Wheel rotation

If a particular test requires that the Z marks of the wheels be located on a specific line (in order to rotate the wheels so that their minimum lateral wheel deviation is at a specific orientation), the following procedure shall be carried out (see Figure 27).

NOTE 1 These Z marks constitute a means of identifying the neutral lateral wheel deviation.

NOTE 2 The procedure below can be performed in conjunction with A.5 and A.7.

With the wheelchair placed on the test plane, lift the rear end of the wheelchair just enough to provide free spin for the rear wheels.

NOTE 3 Keeping the front wheels in contact with the ground will hold the wheelchair more stable during the procedure.

Next to the rim of the left rear wheel, place the deviation identification device (see 5.8) on the test plane.

While the wheel is spinning, slowly shift the deviation identification device closer to the rim of the wheel in the lateral direction. Identify the point where the deviation identification device contacts the side face of the rim for the first time. At that point, mark the wheel with "X" as a symbol for the most lateral point.

While the wheel is spinning, continue to slowly shift the deviation identification device closer to the rim of the wheel in lateral direction, making the area of contact with the rim longer and longer. Identify the point where the deviation identification device closes the circular area of contact to a complete circle. At that point, mark the wheel with "Y" as a symbol for the least lateral point.

Identify the radii through "X" and "Y" and measure the angle α between them. Draw a line that halves angle α and mark the two points where this line intersects with the side face of the rim, with "Z" as a symbol for the neutral lateral deviation. Repeat this procedure for the right rear wheel.

With the wheelchair placed on the test plane, lift the front end of the wheelchair just enough to provide free spin for the front wheels. Repeat the procedure for the front wheels.

NOTE 4 Castor forks can be fixed for proper alignment of castor wheels.

NOTE 5 The Z marks are used in A.14 to A.22.

標準檢驗局
內部公務使用

© ISO 2008 – All rights reserved

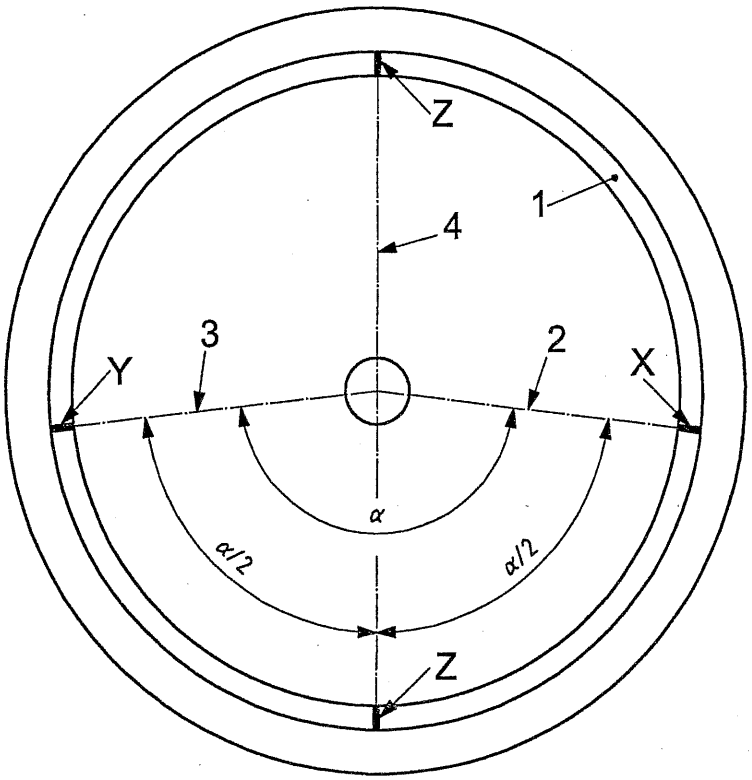

Key

X most lateral point of the rim

Y least lateral point of the rim

Z neutral lateral deviation of the rim

1 side face of the rim

2 radius through mark "X"

3 radius through mark "Y"

4 line that halves the angle between 2 and 3

α angle between 2 and 3

Figure 27 — Location of Z marks

7.10 Asymmetrical design of test wheelchair

When the wheelchair under test is of asymmetrical design and a measurement is made while the wheelchair is in motion (see 8.11 to 8.17), perform the test in both directions. If the results from the two tests are not identical, record the larger value.

EXAMPLE Asymmetrical design is usually found on manual wheelchairs where propulsion is performed with one lever for one hand.

標準檢驗局
內部公務使用

8 Required measurements

8.1 General

The measurements obtained from the tests in this clause shall be disclosed in the test report, specification sheets and the operator's manual in accordance with Clauses 9 and 10.

© ISO 2008 – All rights reserved

NOTE 1 The items listed are used to determine whether the wheelchair will suit the anticipated usage.

The test procedures are specified to ensure comparable and repeatable results.

The tests apply to all wheelchairs, except where otherwise stated.

Before each particular test, adjust the wheelchair in accordance with Clause 7 and place it on the test plane.

For tests described in 8.2 to 8.10, do not load the wheelchair with the test dummy. For tests described in 8.11 to 8.17, load the wheelchair with the appropriate test dummy (including foot space gauges), as specified in 7.6.2, or a human test person, as specified in 7.6.3.

NOTE 2 A Technical Report, ISO/TR 13570-2[2], is under consideration.

WARNING This part of ISO 7176 calls for the use of procedures that can be injurious to health if adequate precautions are not taken. It refers only to technical suitability and does not absolve the manufacturer or test house from legal obligations relating to health and safety at any stage.

8.2 Full overall length

This test is applicable for wheelchairs with leg supports and/or foot supports.

a) Determine the distance between the most forward and most rearward point of the wheelchair when measured parallel to the wheelchair longitudinal axis.

b) Measure and record the full overall length to an accuracy of ± 10 mm.

8.3 Overall width

a) Determine the distance between the most lateral parts of the wheelchair when it is assembled and ready for use when measured horizontally and perpendicular to the wheelchair longitudinal axis.

b) Measure and record the overall width to an accuracy of ± 10 mm.

8.4 Handgrip height

NOTE According to Clause 9, the results of this test are only required for wheelchairs with handrims.

a) Determine the vertical distance from the test plane to the handgrip reference points of the wheelchair.

b) Measure and record the handgrip height to an accuracy of ± 10 mm.

8.5 Stowage length

NOTE According to Clause 9, the results of this test are only required for wheelchairs without handrims.

a) Remove all components not requiring the use of tools to remove them. Fully fold and/or dismantle the wheelchair to reduce its volume for transport or stowing purposes, without the use of tools, as recommended by the manufacturer.

b) Determine the distance between the most forward and most rearward point of the wheelchair when measured parallel to the wheelchair longitudinal axis, excluding the removed/dismantled parts.

c) Measure and record the stowage length to an accuracy of ± 10 mm.

標準檢驗局
內部公務使用

© ISO 2008 – All rights reserved

8.6 Stowage width

a) Remove all components not requiring the use of tools to remove them. Fully fold and/or dismantle the wheelchair to reduce its volume for transport or stowing purposes without the use of tools as recommended by the manufacturer.

b) Determine the distance between the outermost lateral points (left and right) of the wheelchair when measured horizontally and perpendicular to the wheelchair longitudinal axis, excluding the removed/dismantled parts.

c) Measure and record the stowage width to an accuracy of ± 10 mm.

8.7 Stowage height

NOTE 1 According to Clause 9, the results of this test are only required for wheelchairs without handrims.

a) Remove all components not requiring the use of tools to remove them. Fully fold and/or dismantle the wheelchair to reduce its volume for transport or stowing purposes, without the use of tools, as recommended by the manufacturer.

NOTE 2 If the back support can be folded towards the seat, flip it to the seat as close as possible.

b) Determine the vertical distance from the test plane to the uppermost point of the wheelchair, excluding the removed/dismantled parts.

c) Measure and record the stowage height to an accuracy of ± 10 mm.

8.8 Rising

NOTE According to Clause 9, the results of this test are only required for wheelchairs with handrims.

This test is applicable for wheelchairs with anti-tip devices.

Check the position of the anti-tip devices against the specifications in 7.3.1 or 7.3.2.

a) Tilt the wheelchair in a rearward direction until the anti-tip device contacts the test plane. Determine the vertical distance between the lowermost point of the lifted front wheels and the test plane.

b) Measure and record the rising to an accuracy of ± 1 mm.

8.9 Total mass

Determine and record the total mass of the unloaded wheelchair to the nearest kilogram.

8.10 Mass of heaviest part

NOTE 1 According to Clause 9, the results of this test are only required for wheelchairs without handrims.

a) Dismantle all parts (or assembly of parts) of the wheelchair not requiring the use of tools to do so, to reduce the wheelchair's volume for transport or stowing purposes as recommended by the manufacturer.

b) Determine and record the mass of the heaviest part (or assembly of parts) of the wheelchair to the nearest kilogram.

NOTE 2 The heaviest part may be the remaining frame of the wheelchair.

標準檢驗局
內部公務使用

© ISO 2008 – All rights reserved

8.11 Pivot width

NOTE 1 According to Clause 9, the results of this test are only required for wheelchairs without handrims.

This test is applicable for wheelchairs with full differential steering.

EXAMPLE Handrim-propelled manual wheelchairs and some electrically powered wheelchairs.

If the wheelchair has handrims, the hand space gauges (see 5.6) shall be used.

a) Construct a corridor so that the distance between its walls is variable, by using two parallel adjustable barriers. Place the wheelchair in the corridor and orient it parallel to the walls.

b) Turn the wheelchair around in the corridor in the most suitable manner for the wheelchair, using a single, continuous movement.

NOTE 2 Details of the manoeuvre are described in Clause B.2.

c) Gradually reduce the width of the corridor and determine the minimum corridor width in which the wheelchair can be turned around without touching the walls.

d) Measure and record the pivot width to an accuracy of ± 25 mm.

8.12 Reversing width

NOTE 1 According to Clause 9, the results of this test are only required for wheelchairs without handrims.

This test is applicable for wheelchairs with direct steering or limited differential steering.

EXAMPLE Scooters and some electrically powered wheelchairs.

a) Construct a corridor so that the distance between its walls is variable, by using two parallel adjustable barriers. Place the wheelchair in the corridor and orient it parallel to the walls.

b) Turn the wheelchair around in the corridor in the most suitable manner for the particular wheelchair involved. However, only one initial forward drive, one single rearward drive, and one final forward drive is permitted. The test drive is completed when the wheelchair has turned through 180°.

NOTE 2 Details of the manoeuvre are described in Clause B.3.

c) Gradually reduce the width of the corridor and determine the minimum corridor width in which the wheelchair can be turned around without touching the walls.

d) Measure and record the reversing width to an accuracy of ± 25 mm.

8.13 Turning diameter

NOTE 1 According to Clause 9, the results of this test are only required for wheelchairs without handrims.

If the wheelchair has handrims, the hand space gauges (see 5.6) shall be used.

a) Determine the diameter of the smallest cylindrical envelope in which the wheelchair can be turned for 360° in one constant forward drive with maximum steering effect.

NOTE 2 Details are provided in Annex C.

b) Measure and record the turning diameter to an accuracy of ± 25 mm.

標準檢驗局
內部公務使用

© ISO 2008 – All rights reserved

標準檢驗局
內部公務使用

8.14 Ground clearance

NOTE According to Clause 9, the results of this test are only required for wheelchairs without handrims.

a) Identify the lowest point of the wheelchair that is not a wheel, adjustable foot support or anti-tip device. Determine the vertical distance between the lowest point and the test plane.

b) Measure and record the ground clearance to an accuracy of ± 1 mm.

8.15 Required width of angled corridor

If the wheelchair has handrims, the hand space gauges (see 5.6) shall be used.

a) Construct the inner wall of a corridor with a 90° turn by using two adjustable barriers connected perpendicularly to each other. On the test plane draw an orienting line that starts at the outer corner of that wall under an angle of 135°. Construct the outer wall of the corridor by using two adjustable barriers connected perpendicularly to each other. Position the corner of the outer wall on the orienting line. Take care to keep the walls parallel (see Figure 15).

b) Place the wheelchair at the entrance of the corridor and orient it parallel to the walls.

c) Drive the wheelchair forward around the corridor's corner in the most suitable manner for the particular wheelchair involved. However, only one forward drive is permitted. The test drive is completed when the wheelchair is parallel to the exit of the corridor.

d) Gradually reduce the width of the corridor by shifting the corners along the orienting line closer and determine the minimum corridor width in which the wheelchair can be driven without touching the walls.

e) Measure and record the minimum width in the corridor to an accuracy of ± 25 mm.

f) Repeat the test but drive the wheelchair rearward around the corridor's corner.

g) Identify the greater of the two test results and record it as the required width of angled corridor.

8.16 Required doorway entry depth

If the wheelchair has handrims, the hand space gauges (see 5.6) shall be used.

a) Place the wheelchair in front of a wall which contains an 800 mm wide door that opens towards the wheelchair (see Figure 14).

b) Place one adjustable barrier behind the wheelchair and place one adjustable barrier lateral to the wheelchair at a side distance of 600 mm when measured from the door. Take care to keep the rear barrier parallel and the side barrier perpendicular to the wall containing the door.

c) Drive the wheelchair towards the door and open the door. If necessary, move the wheelchair to give way for the wing of the door.

d) Determine the minimum distance between the adjustable barrier that is behind the wheelchair and the wall containing the door.

e) Measure and record the required doorway entry depth to an accuracy of ± 25 mm.

8.17 Required corridor width for side opening

If the wheelchair has handrims, the hand space gauges (see 5.6) shall be used.

a) Construct the walls of a corridor with a side opening that is 800 mm wide by using the adjustable barriers. Take care to keep the walls parallel (see Figure 13).

b) Place the wheelchair in the corridor and orient it parallel to the walls and with its front end towards the opening.

© ISO 2008 – All rights reserved

標準檢驗局
內部公務使用

c) Drive the wheelchair forward along the corridor and out of the opening in the most suitable manner for the particular wheelchair involved. However, only one forward drive is permitted. The test drive for exiting is completed when the wheelchair has left the corridor and is perpendicular to the walls.

d) Gradually reduce the width of the corridor and determine the minimum corridor width from which the wheelchair can be driven though the opening without touching the walls.

e) Determine the minimum width of the corridor for exiting the corridor.

f) Place the wheelchair at the opening but outside the corridor and perpendicular to the walls and with its front end towards the opening. Then drive the wheelchair forward through the opening into the corridor in the most suitable manner for the particular wheelchair involved. However, only one forward drive is permitted. The test drive for entering is completed when the wheelchair has entered the corridor and is parallel to the walls.

g) Gradually reduce the width of the corridor and determine the minimum corridor width from which the wheelchair can be driven though the opening without touching the walls.

h) Determine the minimum width of the corridor for entering the corridor.

i) Identify the greater of the two test results and record it as the required corridor width for side opening.

j) Measure and record the required corridor width for side opening to an accuracy of ± 25 mm.

NOTE For some wheelchairs of conservative design and with full differential steering, the required corridor width for side opening is equal to the distance between point A (the most lateral point of the wheelchair or hand space gauge that is on the axis of the fixed wheels on one side of the wheelchair) and point B (the point of the wheelchair or foot space gauge at the opposite side and most remote from point A) (see Figure 28). Since in most cases the test for entering the corridor takes up more space than for exiting, the distance AB may be used as a first approach when running the test.

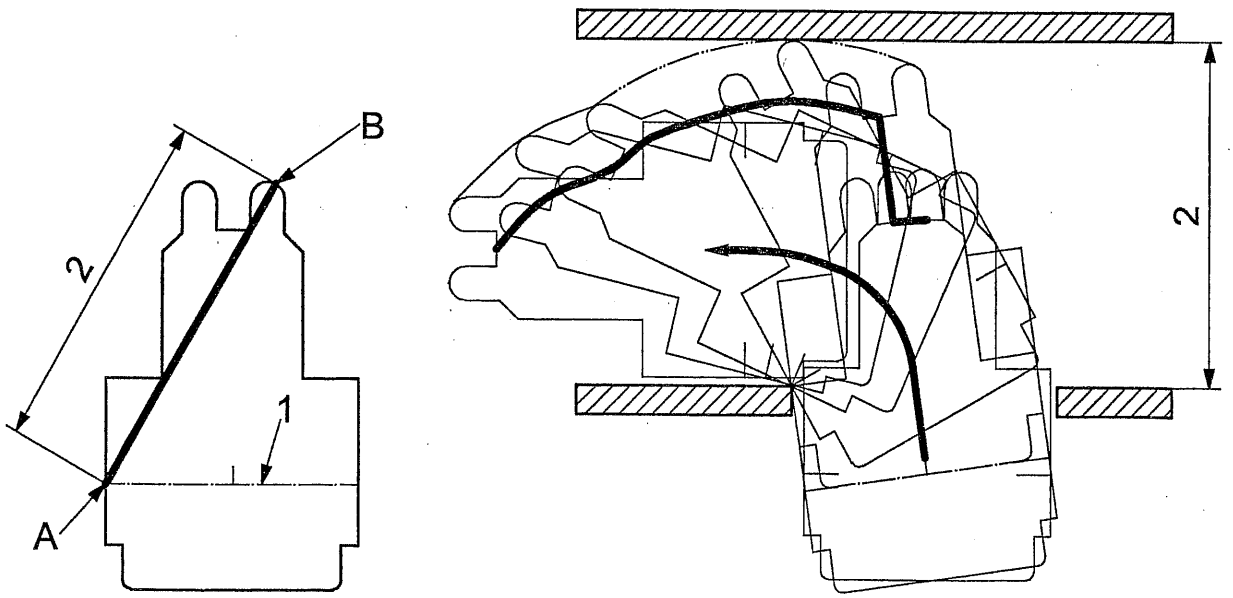

a) footprint of a typical wheelchair including hand space gauges and foot space gauges

b) test for entering the corridor

Key

1 axis of fixed wheels

2 required corridor width for side opening

Figure 28 — First approach when running the test

© ISO 2008 – All rights reserved

9 Disclosure of information

9.1 General

The specification sheets and the operator's manual shall conform to the requirements in ISO 7176-15 and be in the official language(s) of the country in which the wheelchair is marketed.

9.2 Wheelchairs with handrims

NOTE 1 Wheelchairs with handrims comprise wheelchairs with manual handrim propulsion and handrim activated power assisted wheelchairs (HAPAW).

The specification sheets and the operator's manual shall provide the following information:

a) the occupant mass group I, II or III as specified in 4.3;

b) the effective seat width of the test wheelchair;

c) the following test results:

1) full overall length (for wheelchairs with leg supports and/or foot supports);

2) overall width;

3) handgrip height;

4) stowage width;

NOTE 2 When considering stowage dimensions, detached items will also require space for their safe storage.

5) rising (for wheelchairs with anti-tip devices);

6) total mass;

7) required width of angled corridor;

8) required doorway entry depth;

9) required corridor width for side opening.

標準檢驗局
內部公務使用

9.3 Wheelchairs without handrims

NOTE 1 Wheelchairs without handrims comprise electrically powered wheelchairs and manual wheelchairs with lever propulsion and push wheelchairs.

The specification sheets and the operator's manual shall provide the following information:

a) the class A, B or C as specified in 4.2 (for electrically powered wheelchairs);

b) the occupant mass group I, II or III as specified in 4.3;

c) the effective seat width of the test wheelchair;

d) the following test results:

1) full overall length (for wheelchairs with leg supports and/or foot supports);

2) overall width;

© ISO 2008 – All rights reserved

3) stowage length;

4) stowage width;

5) stowage height;

NOTE 2 When considering stowage dimensions, detached items will also need space for their safe storage.

6) total mass;

7) mass of heaviest part;

8) pivot width (for wheelchairs with full differential steering);

9) reversing width (for wheelchairs with direct steering or limited differential steering);

10) turning diameter;

11) ground clearance;

12) required width of angled corridor;

13) required doorway entry depth;

14) required corridor width for side opening.

標準檢驗局
內部公務使用

10 Test report

10.1 Requirements

The test report shall contain the following information:

a) a statement that the tests have been carried out in accordance with ISO 7176-5;

b) the name, address and accreditation status of the organization that performed the tests;

c) the date of issue of the test report;

d) the name and address of the manufacturer of the wheelchair;

e) the model of the wheelchair and any serial and batch numbers;

f) the configuration of the wheelchair for each test;

g) the mass of test dummy used or the test person with supplementing masses;

h) a photograph of the wheelchair under test;

i) the class of the wheelchair A, B or C as specified in 4.2 (for electrically powered wheelchairs);

j) the occupant mass group I, II or III as specified in 4.3;

k) the effective seat width of the test wheelchair (if the appropriate reference set-up value is not available);

l) the measurements obtained from the tests included in Clause 8:

1) full overall length (for wheelchairs with leg supports and/or foot supports);

© ISO 2008 – All rights reserved

2) overall width;

3) handgrip height;

4) stowage length;

5) stowage width;

6) stowage height;

7) rising;

8) total mass;

9) mass of heaviest part;

10) pivot width (for wheelchairs with full differential steering);

11) reversing width (for wheelchairs with direct steering or limited differential steering);

12) turning diameter;

13) ground clearance;

14) required width of angled corridor;

15) required doorway entry depth;

16) required corridor width for side opening.

標準檢驗局
內部公務使用

10.2 Recommendations

If tests of Annex A are performed, the test report should contain the technical dimensions obtained from tests included in Annex A:

1) reduced overall length (for wheelchairs without leg supports and/or foot supports or with removable leg supports and/or foot supports);

2) overall height;

3) radial wheel deviation of all wheels;

4) lateral wheel deviation of all wheels;

5) radial handrim deviation of all handrims (for wheelchairs with handrims);

6) lateral handrim deviation of all handrims (for wheelchairs with handrims);

7) full occupied length (for wheelchairs with leg supports and/or foot supports);

8) reduced occupied length (for wheelchairs without leg supports and/or foot supports or with removable leg supports and/or foot supports);

9) occupied width;

10) occupied height;

11) ramp transition angle;

© ISO 2008 – All rights reserved

12) wheelbase in reference setting and the maximum difference between left and right, wheelbase in minimum and maximum setting and number of settings (for wheelchairs with handrims);

13) rear wheel track;

14) front wheel track;

15) camber in reference setting and the maximum asymmetry between left and right, camber in most positive and most negative settings and number of settings (for wheelchairs with handrims);

16) toe;

17) skew;

18) castor rake of all castor wheels and the maximum difference between left and right (for wheelchairs with castor wheels);

19) castor cant of all castor wheels and the maximum asymmetry between left and right (for wheelchairs with castor wheels);

20) castor trail of all castor wheels and the maximum difference between left and right (for wheelchairs with castor wheels);

21) castor wheel misalignment of all castor wheels and the maximum asymmetry between left and right (for wheelchairs with castor wheels).

標準檢驗局
內部公務使用

© ISO 2008 – All rights reserved

Annex A
(informative)

Technical dimensions

標準檢驗局
內部公務使用

A.1 General

The technical measurements obtained from the tests in this annex should be disclosed in the test report.

The test procedures are specified to ensure comparable and repeatable test results.

The tests apply to all wheelchairs, except where otherwise stated.

For tests in Clauses A.2 to A.7 do not load the wheelchair with the test dummy. For tests in Clauses A.8 to A.22, load the wheelchair with the appropriate test dummy (including foot space gauges) as specified in 7.6.2.

NOTE Typical values and recommended limits of this annex will be listed in the Technical Report ISO/TR 13570-2[2]. Typical values and recommended limits for dimensions, mass and manoeuvring space as determined in this part of ISO 7176.

WARNING This part of ISO 7176 calls for the use of procedures that can be injurious to health if adequate precautions are not taken. It refers only to technical suitability and does not absolve the manufacturer or test house from legal obligations relating to health and safety at any stage.

A.2 Reduced overall length

This test is applicable for wheelchairs without leg supports and/or foot supports or with removable leg supports and/or foot supports.

a) Remove any lower leg support assemblies.

b) Determine the distance between the most forward and most rearward point of the wheelchair when measured parallel to the wheelchair longitudinal axis.

c) Measure and record the reduced overall length to an accuracy of ± 10 mm.

A.3 Overall height

a) Determine the vertical distance from the test plane to the uppermost point of the wheelchair.

b) Measure and record the overall height to an accuracy of ± 10 mm.

A.4 Radial wheel deviation

NOTE This test may be performed in conjunction with tests described in A.5, A.6 and A.7.

a) Lift the left side of the wheelchair just enough to provide free spin for the left wheels. In front of the tyre of the left rear wheel, place the deviation identification device (see 5.8) on the test plane.

b) While the wheel is spinning, slowly shift the deviation identification device closer to the circumference of the wheel in a radial direction. Identify the point where the deviation identification device contacts the wheel median line for the first time. Measure the longest radius of the wheel at this point to an accuracy of ± 0,1 mm.

© ISO 2008 – All rights reserved

標準檢驗局
內部公務使用

c) While the wheel is spinning, continue to slowly shift the deviation identification device closer to the circumference of the wheel in a radial direction, making the area of contact with the wheel longer and longer. Identify the point where the deviation identification device closes the circular area of contact to a complete circle. Measure the shortest radius of the wheel at this point to an accuracy of ± 0,1 mm.

d) Calculate the radial wheel deviation by subtracting the shortest radius from the longest radius.

e) Repeat this procedure for all wheels.

f) Record the radial wheel deviation for all wheels to an accuracy of ± 0,1 mm.

A.5 Lateral wheel deviation

NOTE This test may be performed in conjunction with tests described in A.4, A.6 and A.7.

a) Identify marks X and Y as specified in 7.9.

b) Place the right angle (see 5.7) on the test plane and lateral to mark X. Measure parallel to the wheel's axis the lateral distance between the right angle and the side face of the rim at mark X, to an accuracy of ± 0,1 mm. Without moving the wheelchair or the right angle, turn the wheel so that mark Y is in place of mark X. Measure parallel to the wheel's axis the lateral distance between the right angle and the side face of the rim at point Y, to an accuracy of ± 0,1 mm.

c) Calculate the lateral wheel deviation by subtracting the lateral distance at mark X from the lateral distance at mark Y.

d) Repeat this procedure for all other wheels.

e) Record the lateral wheel deviation for all wheels to an accuracy of ± 0,1 mm.

A.6 Radial handrim deviation

NOTE This test may be performed in conjunction with tests described in A.4, A.5 and A.7.

This test is applicable for wheelchairs with handrims.

a) Lift the wheelchair just enough to provide free spin for the manoeuvring wheels. In front of the left handrim, place the deviation identification device (see 5.8) on the test plane.

b) While the handrim is spinning, slowly shift the deviation identification device closer to the handrim in a radial direction. Identify the point where the deviation identification device contacts the median line of the handrim for the first time. Measure the longest radius of the handrim at this point to an accuracy of ± 0,1 mm.

c) While the handrim is spinning, continue to slowly shift the deviation identification device closer to the handrim in a radial direction, making the area of contact with the handrim longer and longer. Identify the point where the deviation identification device closes the circular area of contact to a complete circle. Measure the shortest radius of the handrim at this point to an accuracy of ± 0,1 mm.

d) Calculate the left radial handrim deviation by subtracting the shortest radius from the longest radius.

e) Repeat this procedure for the right handrim.

f) If the wheelchair has more than two handrims, repeat a) to d) for any other handrim.

g) Identify the greatest radial handrim deviation of the wheelchair.

h) Record the greatest radial handrim deviation to an accuracy of ± 0,1 mm.

© ISO 2008 – All rights reserved

A.7 Lateral handrim deviation

NOTE This test may be performed in conjunction with tests described in A.4, A.5 and A.6.

This test is applicable for wheelchairs with handrims.

a) Lift the wheelchair just enough to provide free spin for the manoeuvring wheels. Next to the lateral side face of the handrim, place the deviation identification device (see 5.8) on the test plane.

b) While the handrim is spinning, slowly shift the deviation identification device closer to the handrim in a lateral direction. Identify the point where the deviation identification device contacts the handrim for the first time. At that point, mark the handrim with "U" as a symbol for the most lateral point.

c) While the handrim is spinning, continue to slowly shift the deviation identification device closer to the handrim in a lateral direction, making the area of contact with the handrim longer and longer. Identify the point where the deviation identification device closes the circular area of contact to a complete circle. At that point, mark the handrim with "V" as a symbol for the least lateral point.

d) Place the right angle (see 5.7) on the test plane and lateral to mark U. Measure, parallel to the wheel's axis, the lateral distance between the right angle and the lateral side of the handrim at mark U to an accuracy of ± 0,1 mm. Without moving the wheelchair or the right angle, turn the wheel so that mark V is in place of mark U. Measure, parallel to the wheel's axis, the lateral distance between the right angle and the lateral side of the handrim at mark V to an accuracy of ± 0,1 mm.

e) Calculate the lateral handrim deviation by subtracting the lateral distance at mark U from the lateral distance at mark V.

f) Repeat this procedure for the right handrim.

g) If the wheelchair has more than two handrims, repeat a) to e) for any other handrim.

h) Identify the greatest lateral handrim deviation of the wheelchair.

i) Record the greatest lateral handrim deviation to an accuracy of ± 0,1 mm.

標準檢驗局
內部公務使用

A.8 Full occupied length

This test is applicable for wheelchairs with leg supports and/or foot supports.

a) Determine the distance between the most forward point of the wheelchair or test dummy (including the appropriate foot space gauges) and most rearward point of the wheelchair or test dummy when measured parallel to the wheelchair longitudinal axis.

b) Measure and record the full occupied length to an accuracy of ± 10 mm.

A.9 Reduced occupied length

This test is applicable for wheelchairs without leg supports and/or foot supports or with removable leg supports and/or foot supports.

For this particular test, the knee space gauge (see 5.4) shall be used.

a) Remove any lower leg support assemblies.

b) Determine the distance between the most forward point of the wheelchair or test dummy (including knee space gauge) and most rearward point of the wheelchair or test dummy when measured parallel to the wheelchair longitudinal axis.

c) Measure and record the reduced occupied length to an accuracy of ± 10 mm.

© ISO 2008 – All rights reserved

A.10 Occupied width

If the wheelchair has handrims, the hand space gauges (see 5.6) shall be used.

a) With the wheelchair fully unfolded for use, measure, horizontally and perpendicular to the wheelchair longitudinal axis, the distance between the most lateral points of the wheelchair and/or test dummy and/or hand space gauge.

b) Measure and record the occupied width to an accuracy of ± 10 mm.

A.11 Occupied height

a) Measure the vertical distance from the test plane to a point on the upper side of the test dummy that is 100 mm in front of the back support plane (see Figure A.1).

b) Estimate the occupied height (see Figure A.1), taking into account the presence of a seat cushion, as follows:

   1) if the wheelchair has a sling seat or a solid seat that is not covered by a cushioned material, add an additional amount of 180 mm for occupant mass group I and 350 mm for occupant mass groups II and III;

   2) if the wheelchair has a solid seat that is covered by a cushioned material, add an additional amount of 160 mm for occupant mass group I and 330 mm for occupant mass groups II and III.

NOTE The additional amount complies with the height that the head of a seated occupant rises above the trunk of the test dummy when the head is in a vertical position, independent of the back support angle. This procedure takes into consideration any practical seat angle and back support angle. Where necessary, it also takes into consideration a seat cushion with a compressed thickness of 20 mm. Dimensions are in accordance with DIN 33402[3] and ISO 7176-11.

c) Measure and record the occupied height to an accuracy of ± 10 mm.

標準檢驗局
內部公務使用

© ISO 2008 – All rights reserved

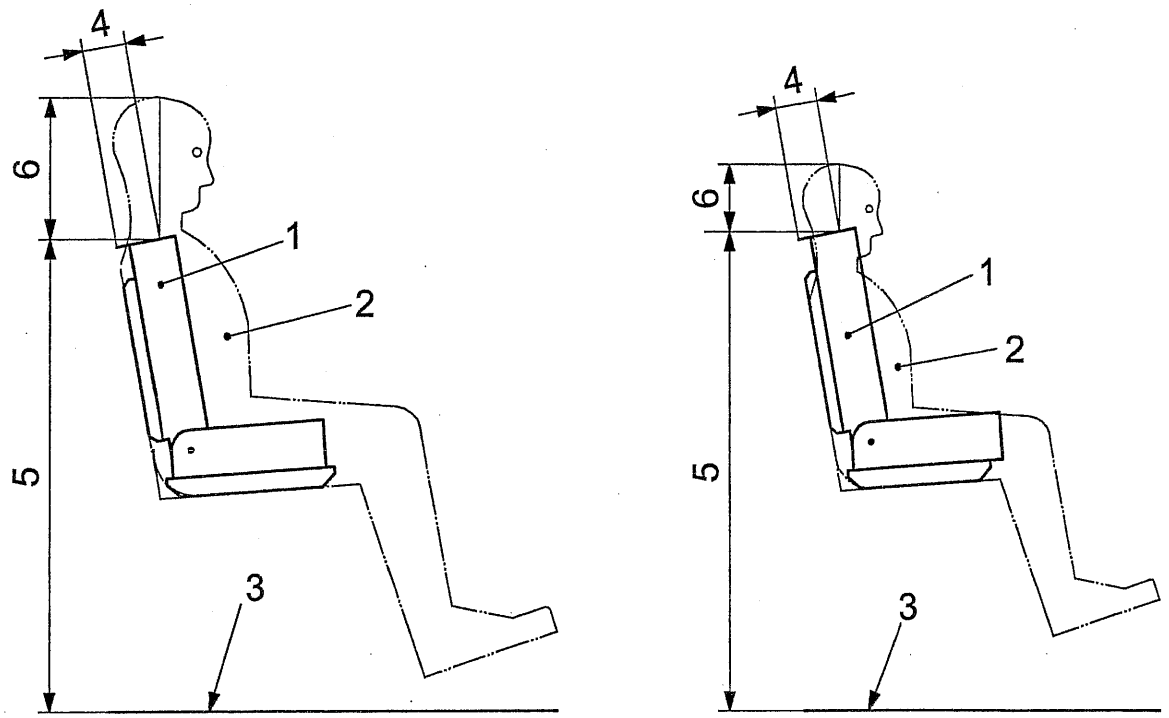

a) occupant mass groups II and III

b) occupant mass group I

Key

1 test dummy

2 reference occupant (in scale of the respective human dimensions)

3 test plane

4 100 mm in front of the back support plane

5 vertical distance from the test plane to a point on the upper side of the test dummy that is 100 mm in front of the back support plane

6 additional amount

Figure A.1 — Measurement of occupied height

標準檢驗局
內部公務使用

A.12 Ramp transition angle

Be sure to verify that the position of the test dummy's foot space gauges are in accordance with 7.6.2.

a) Place ramp gauge A (see 5.9) on the test plane and in contact with the front wheels. Increase its angle by lifting its forward end until any part of the wheelchair or test dummy is in contact. If there is no part of the wheelchair in front of the front wheels, record this fact in the test report. Measure and record the front ramp transition angle to an accuracy of ± 1° [see Figure 11 a)].

b) Place ramp gauge A (see 5.9) on the test plane and in contact with the rear wheels. Increase its angle by lifting its rearward end until any part of the wheelchair is contacted. If there is no part of the wheelchair to the rear of the rear wheels, record this fact in the test report. Measure and record the rear ramp transition angle to an accuracy of ± 1° [see Figure 11 b)].

c) Raise the wheelchair so that the lower parts between the wheels are accessible. Use ramp gauge B (see 5.10) and measure the greatest angle α between the two pieces of ramp gauge B to an accuracy of ± 1° [see Figures 11 c) and A.2]. Then calculate and record the supplementary angle by subtracting the greatest measured angle α from 180°.

© ISO 2008 – All rights reserved

NOTE 1 Usually the greatest angle, α is achieved when placing ramp gauge B with its two flat pieces against front and rear wheels and with its hinge against the lowest wheelchair point near the middle between the wheels.

NOTE 2 When lifting the loaded wheelchair some dimensions can change slightly. These changes need not be regarded.

d) Identify the smallest values derived from a), b) and c) and record it as the ramp transition angle.

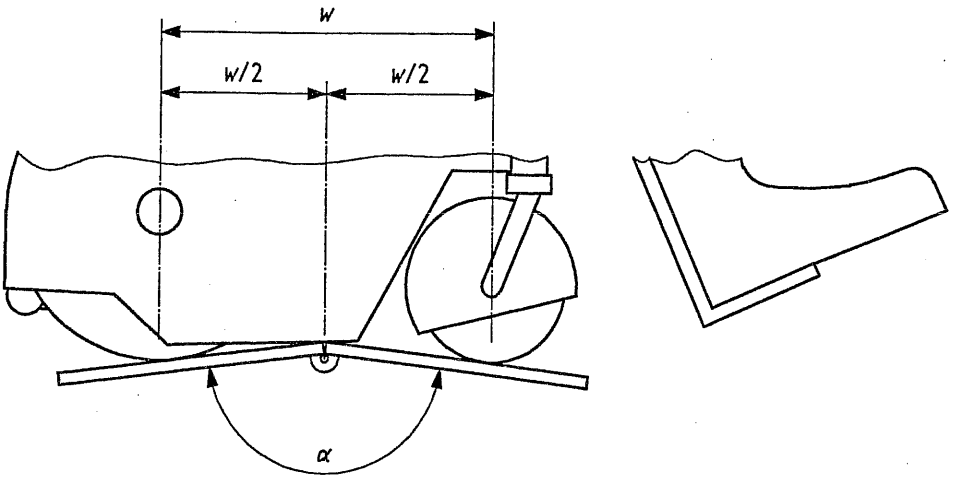

Figure A.2 — Measurement of greatest angle, α, when wheelchair is at upper transition

A.13 Wheelbase

a) Measure the distance between the ground contact points of the left front wheel and the left rear wheel when measured parallel to the wheelchair longitudinal axis, to an accuracy of ± 1 mm.

b) Measure the distance between the ground contact points of the right front wheel and the right rear wheel when measured parallel to the wheelchair longitudinal axis, to an accuracy of ± 1 mm.

c) If the wheelchair has three wheels, take the measurement from each wheel of a pair to the single wheel.

d) Calculate the reference wheelbase as the mean of the two measurements.

e) Calculate the difference between left and right wheelbase for the reference setting by subtracting the smaller wheelbase from the larger.

f) If the wheelbase is adjustable, set it to its minimum (as specified by the manufacturer) and repeat a) to e).

g) If the wheelbase is adjustable, set it to its maximum (as specified by the manufacturer) and repeat a) to e).

h) From the absolute values of the calculated differences between left and right wheelbase of the three wheelbase settings (reference, maximum and minimum) identify the maximum difference.

i) Identify the total number of wheelbase settings (as specified by the manufacturer).

j) Record the wheelbase of the reference setting to an accuracy of ± 1 mm.

k) Record the minimum wheelbase to an accuracy of ± 1 mm.

l) Record the maximum wheelbase to an accuracy of ± 1 mm.

m) Record the maximum difference between left and right wheelbase to an accuracy of ± 1 mm.

n) Record the number of wheelbase settings.

標準檢驗局
內部公務使用

© ISO 2008 – All rights reserved

A.14 Rear wheel track

a) Rotate all rear wheels so that, for each one, its two "Z" marks (see 7.9) are on a vertical line through the axis of the wheel.

b) Determine the distance between the ground contact points of the left and right rear wheel when measured horizontally and perpendicular to the wheelchair longitudinal axis. If there is only one rear wheel, the rear wheel track is zero.

c) Measure and record the rear wheel track to an accuracy of ± 1 mm.

A.15 Front wheel track

a) Rotate all front wheels so that, for each one, its two "Z" marks (see 7.9) are on a vertical line through the axis of the wheel.

b) Determine the distance between the ground contact points of the left and right front wheel when measured horizontally and perpendicular to the wheelchair longitudinal axis. If there is only one front wheel, the front wheel track is zero.

c) Measure and record the front wheel track to an accuracy of ± 1 mm.

A.16 Camber

a) Rotate all fixed wheels so that, for each one, its two "Z" marks (see 7.9) are on a vertical line through the axis of the wheel.

b) Place the right angle (see 5.7) on the test plane lateral to the left fixed wheel.

c) Measure horizontally and perpendicular to the wheelchair longitudinal axis and record as A the distance between the right angle and the lowest point of the side face of the rim of the left wheel, to an accuracy of ± 1 mm.

d) Without moving the wheelchair or the right angle, measure horizontally and perpendicular to the wheelchair longitudinal axis and record as B the distance between the right angle and the highest point of the side face of the rim of the left wheel, to an accuracy of ± 1 mm.

e) Measure and record as C the direct distance between lowest and highest point of the side face of the rim of the left wheel, to an accuracy of ± 1 mm.

f) Calculate the left reference camber by using the following formula:

$$\text{camber} = \arcsin \frac{A-B}{C}$$

標準檢驗局
內部公務使用

NOTE 1 Keep records of C for later use in A.17.

NOTE 2 Observe the sign convention.

g) Repeat this procedure for the right fixed wheel.

h) Subtract the right camber from the left camber under consideration of the sign convention. Take the absolute value from this subtraction and record it as the asymmetry between left and right camber of the reference camber setting.

i) If the camber is adjustable, set it to the most positive camber and repeat a) to h).

j) If the camber is adjustable, set it to the most negative camber and repeat a) to h).

k) From the absolute values of the calculated asymmetries between left and right camber of the three camber settings (reference, most positive and most negative), identify the maximum asymmetry.

© ISO 2008 – All rights reserved

l) Identify the number of camber settings (as specified by the manufacturer).

m) Record the reference camber to an accuracy of ± 0,1°.

n) Record the most positive camber to an accuracy of ± 0,1°.

o) Record the most negative camber to an accuracy of ± 0,1°.

p) Record the maximum asymmetry between left and right camber to an accuracy of ± 0,1°.

q) Record the number of camber settings.

A.17 Toe

NOTE 1 This test may be performed in conjunction with A.18.

a) Rotate all fixed wheels so that their two "Z" marks (see 7.9) are on a horizontal line through the axis of the wheel.

Measure horizontally and perpendicular to the wheelchair longitudinal axis and record as E the distance between the most forward point of the inner side face of the rim of the left wheel and the most forward point of the inner side face of the rim of the right wheel, to an accuracy of ± 1 mm.

Without moving the wheelchair, measure horizontally and perpendicular to the wheelchair longitudinal axis and record as F the distance between the most rearward point of the inner side face of the rim of the left wheel and the most rearward point of the inner side face of the rim of the right wheel to an accuracy of ± 1 mm.

Measure and record as C the direct distance between the most rearward and most forward point of the inner side face of the left rim, to an accuracy of ± 1 mm.

NOTE 2 Records of C from A.16 e) may be used.

b) Calculate the angle of toe by using the following formula:

$$\text{toe} = 2 \times \arcsin \frac{F - E}{2C}$$

NOTE 3 Observe the sign convention.

NOTE 4 Keep records of E and F for later use in A.18.

c) Record the toe to an accuracy of ± 0,1°.

標準檢驗局
內部公務使用

A.18 Skew

NOTE 1 This test may be performed in conjunction with A.17.

Load the wheelchair with the test dummy in accordance with 7.6.2. The dummy may be replaced by a human test driver (see 7.6.3).

a) Rotate all fixed wheels so that, for each one, its two "Z" marks (see 7.9) are on a horizontal line through the axis of the wheel.

b) Measure and record as G the distance between the most forward point of the inner side face of the rim of the left wheel and the most rearward point of the inner side face of the rim of the right wheel, to an accuracy of ± 1 mm.

© ISO 2008 – All rights reserved

c) Without moving the wheelchair, measure and record as H the distance between the most forward point of the inner side face of the rim of the right wheel and the most rearward point of the inner side face of the rim of the left wheel, to an accuracy of ± 1 mm.

NOTE 2 When the difference between G and H is less than 2 mm, the skew is insignificant.

d) Calculate the skew by using the following equation:

$$\text{skew} = \frac{\sqrt{G^2 - T^2} - \sqrt{H^2 - T^2}}{2}$$

標準檢驗局
內部公務使用

where T is the arithmetic mean from E and F (see A.17).

NOTE 3 The sign convention is used for consistent information. Positive values of skew indicate that the left wheel is in front of the right wheel and negative values indicate that the right wheel is in front of the left wheel.

e) Record the skew to an accuracy of ± 1 mm.

A.19 Castor rake

This test is applicable for wheelchairs with castor wheels.

a) Position the wheelchair on the test plane (see 5.1) with all castor wheels in the forward trailing position. Place blocks of equal thickness under each wheel.

b) Remove the block from the left castor wheel. Lift and support the wheelchair at a suitable point of its frame so that the castor wheel is at the same distance from the test plane as the other wheels (see Figure A.3).

c) Apply an indicator to the castor assembly in order to establish an auxiliary point that is at least 60 mm remote from the castor axis.

NOTE 1 Squeezing a thin sheet of material (e.g. steel or wood) between wheel and fork is sufficient.

d) Rotate the left castor wheel about its castor axis to the forward trailing position (pointing to the rear). Measure and record as J the vertical distance between the test plane and the auxiliary point to an accuracy of ± 0,1 mm.

e) Rotate the left castor wheel about its castor axis to the rearward trailing position (pointing to the front). Measure and record as K the vertical distance between the test plane and the auxiliary point to an accuracy of ± 0,1 mm.

f) Measure parallel to the wheelchair longitudinal axis and record as L the distance between the two locations of the auxiliary points.

g) Calculate the castor rake by using the following formula:

$$\text{castor rake} = \arctan\frac{J - K}{L}$$

h) Repeat a) to g) for the right castor wheel.

i) Subtract the right castor rake from the left castor rake under consideration of the sign convention. Take the absolute value from this subtraction and record it as the difference between left and right castor rake of the reference setting.

j) If the castor rake is dependant on any adjustment (e.g. adjustable camber and/or position of the fixed wheels or the castor assembly in vertical and/or horizontal direction), set the wheelchair to the adjustment that gives the most positive castor rake as recommended by the manufacturer. Then correct the castor rake as close as possible to zero as recommended by the manufacturer and repeat a) to h).

© ISO 2008 – All rights reserved

NOTE 2 The correction of the castor rake may be performed by any means recommended by the manufacturer (e.g. angular adjustment of the castor assembly).

k) Set the wheelchair to the adjustment that gives the most negative castor rake as recommended by the manufacturer. Then correct the castor rake as close as possible to zero as recommended by the manufacturer and repeat a) to h).

l) Identify the greatest positive and greatest negative castor rakes from all test results of a) to k) that were unable to be corrected to zero.

m) Record the castor rake of all castor wheels in the reference setting, to an accuracy of ± 0,1°.

n) Record the difference between left and right castor rake of the reference setting, to an accuracy of ± 0,1°.

o) Record the greatest positive and greatest negative castor rakes where it was not possible to correct them to zero, to an accuracy of ± 0,1°.

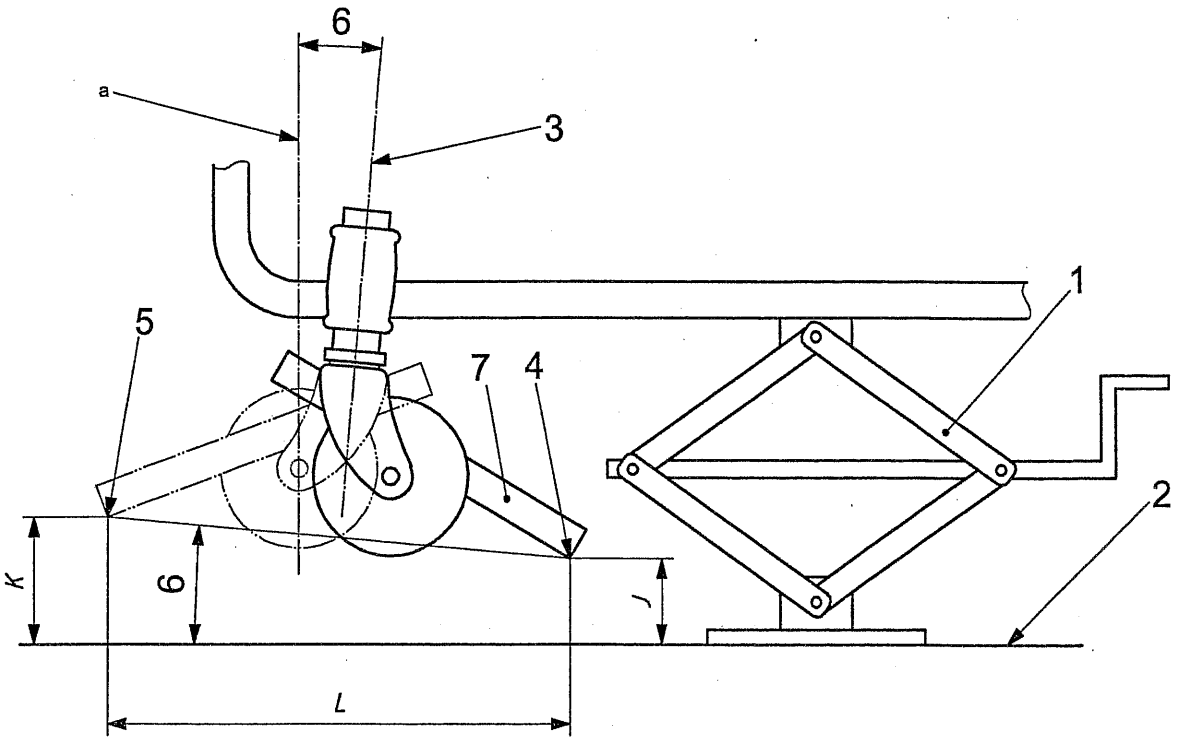

Key

1 means of lifting and supporting the wheelchair
2 test plane
3 castor axis (with negative castor rake in this example)
4 auxiliary point with castor wheel in forward trailing position
5 auxiliary point with castor wheel in rearward trailing position
6 castor rake (negative in this example)
7 indicator

J vertical distance when wheel is in forward trailing position
K vertical distance when wheel is in rearward trailing position
L distance between the two auxiliary points

[a] Vertical.

標準檢驗局
內部公務使用

Figure A.3 — Determination of castor rake

© ISO 2008 – All rights reserved

A.20 Castor cant

This test is applicable for wheelchairs with castor wheels.

a) Position the wheelchair on the test plane (see 5.1) with all castor wheels in the trailing position. Place blocks of equal thickness under each wheel.

b) Remove the block from the left castor wheel. Lift and support the wheelchair at a suitable point of its frame so that the castor wheel is at the same distance from the test plane as the other wheels (see Figure A.4).

c) Apply an indicator to the castor assembly in order to establish an auxiliary point that is at least 60 mm remote from the castor axis.

NOTE 1 Squeezing a thin sheet of material (e.g. steel or wood) between wheel and fork is sufficient.

d) Rotate the left castor wheel about its castor axis to the medial trailing position (pointing to lateral). Measure and record as M the vertical distance between the test plane and the auxiliary point, to an accuracy of ± 0,1 mm.

e) Rotate the left castor wheel about its castor axis to the lateral trailing position (pointing to medial). Measure and record as N the vertical distance between the test plane and the auxiliary point, to an accuracy of ± 0,1 mm.

f) Measure horizontally and perpendicular to the wheelchair longitudinal axis and record as O the distance between the two locations of the auxiliary point.

g) Calculate the castor cant by using the following formula:

$$\text{castor cant} = \arctan \frac{N - M}{O}$$

NOTE 2 Observe the sign convention.

h) Repeat a) to g) for the right castor wheel.

i) Subtract the right castor cant from the left castor cant under consideration of the sign convention. Take the absolute value from this subtraction and record it as the asymmetry between left and right castor cant of the reference setting.

j) Record the castor cant of all castor wheels to an accuracy of ± 0,1°.

k) Record the asymmetry between left and right castor cant to an accuracy of ± 0,1°.

標準檢驗局
內部公務使用

© ISO 2008 – All rights reserved

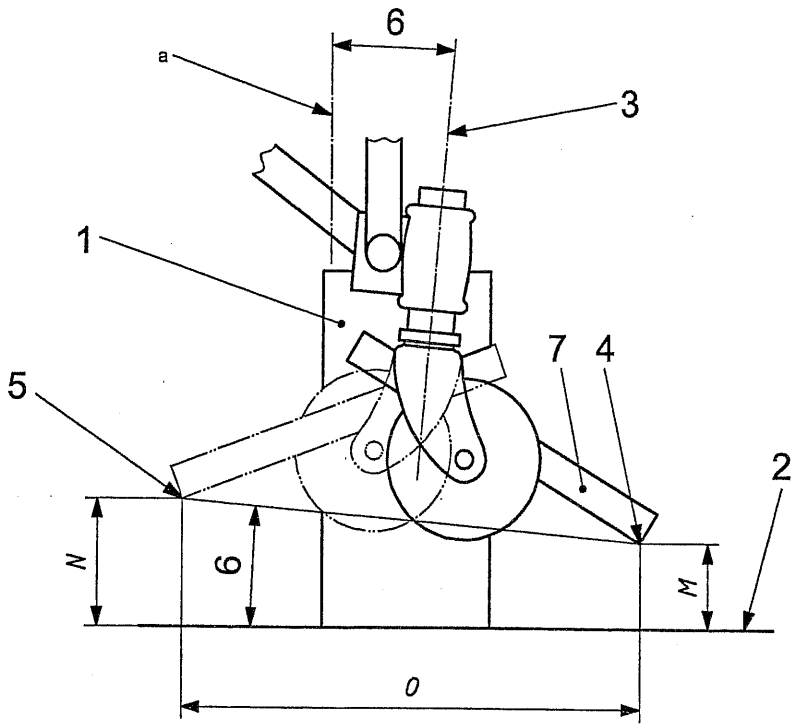

Key

1 means of lifting and supporting the wheelchair
2 test plane
3 castor axis (with positive castor cant in this example)
4 auxiliary point with castor wheel in medial trailing position
5 auxiliary point with castor wheel in lateral trailing position
6 castor cant (positive in this example)
7 indicator

M Vertical distance when wheel is in medial trailing position
N Vertical distance when wheel is in lateral trailing position
O Distance between the two auxiliary points

a Vertical.

標準檢驗局
內部公務使用

Figure A.4 — Determination of castor cant (front view)

A.21 Castor trail

This test is applicable for wheelchairs with castor wheels.

a) Rotate all castor wheels so that, for each one, its two "Z" marks (see 7.9) are on a vertical line through the axis of the wheel.

b) Identify the ground contact point of the left castor wheel.

c) Without moving the wheelchair, identify the fore-aft position of the point of intersection of the castor stem axis with the test plane.

NOTE Placing the castor axis indicator (see 5.12) against the lateral side of the castor stem housing is one sufficient means of identifying the fore-aft position of the point of intersection when viewed horizontally and perpendicular to the wheelchair longitudinal axis (see Figure A.5).

© ISO 2008 – All rights reserved

標準檢驗局
內部公務使用

d) Measure parallel to the wheelchair longitudinal axis the distance between the ground contact point of the castor wheel and the intersection point of the castor axis to an accuracy of ± 1 mm.

e) Repeat a) to d) for the right castor wheel.

f) Calculate the castor trail as the mean of the two measurements.

g) Calculate the difference between left and right castor trail by subtracting the smaller castor trail from the larger.

h) Record the castor trail to an accuracy of ± 1 mm.

i) Record the difference of the castor trail of left and right castor wheel to an accuracy of ± 1 mm.

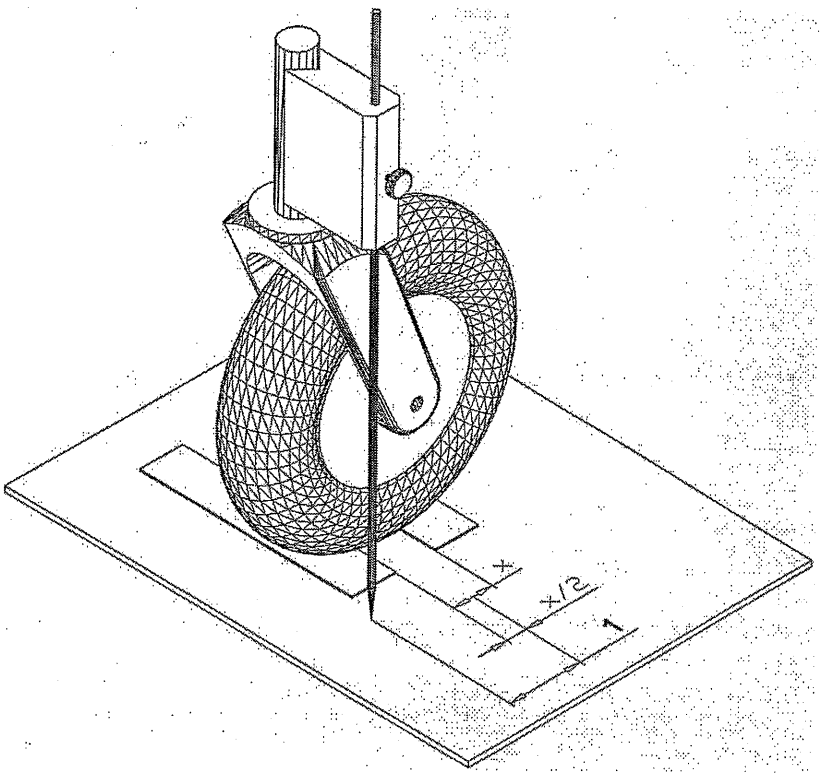

Key

1 castor trail

Figure A.5 — Determination of castor trail (example)

A.22 Castor wheel misalignment

This test is applicable for wheelchairs with castor wheels.

a) Rotate all castor wheels so that, for each one, its two "Z" marks (see 7.9) are on a vertical line through the axis of the wheel.

b) Identify the ground contact point of the left castor wheel.

c) Without moving the wheelchair, identify the lateral position of the point of intersection of the castor stem axis with the test plane.

NOTE Placing the castor axis indicator (see 5.12) against the front side of the castor stem housing is one sufficient means of identifying the lateral position of the point of intersection when viewed parallel to the wheelchair longitudinal axis (see Figure A.6).

© ISO 2008 – All rights reserved

d) Measure horizontally and perpendicular to the wheelchair longitudinal axis the distance between the ground contact point of the castor wheel and the intersection point of the castor axis, to an accuracy of ± 0,1 mm.

e) Inspect the position of the ground contact point of the castor wheel:

— if it is more inward (medial) than the intersection point of the castor axis, record it as positive;

— if it is more outward (lateral) than the intersection point of the castor axis, record it as negative.

f) Repeat a) to e) for the right castor wheel.

g) Subtract the right castor wheel misalignment from the left castor wheel misalignment under consideration of the sign convention. Take the absolute value from this subtraction and record it as the asymmetry between left and right castor wheel misalignment.

h) Record the castor wheel misalignment (sign and value) of all castor wheels to an accuracy of ± 0,1 mm.

i) Record the asymmetry between left and right castor wheel misalignment to an accuracy of ± 0,1 mm.

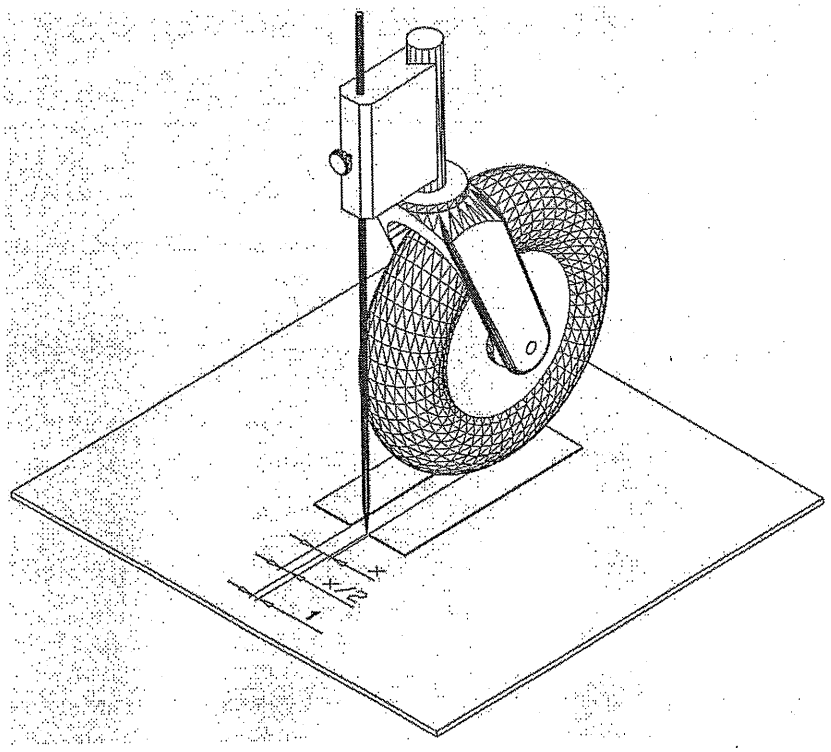

Key

1 castor wheel misalignment

Figure A.6 — Determination of castor wheel misalignment (example)

標準檢驗局
內部公務使用

© ISO 2008 – All rights reserved

Annex B
(informative)

Pivot width and reversing width

B.1 General

This annex gives detailed explanations on how the wheelchair is moved in the most suitable manner when determining the pivot width for a wheelchair with full differential steering and when determining reversing widths for a wheelchair with direct steering or limited differential steering, and how the respective minimum values can be achieved.

B.2 Pivot width

Pivot width is applicable for wheelchairs with full differential steering only.

The shape of the footprint of a typical occupied wheelchair is known from field experience. The footprint of a typical occupied manual wheelchair with full differential steering is shown in Figure B.1. It is symmetrical and the greatest width of the wheelchair is at the drive wheels, while at the footrests the wheelchair is narrower. The foot space gauges are represented by the two bows at the front end, 200 mm apart and exceeding the foot supports. The sketch also shows three distances of importance as follows.

— Distance l stretches between the wheelchair centre-point C and that point of the footprint which is to the rear and to the right of C and most remote from it. Distance l will be perpendicular to the walls after the wheelchair has turned to the left for angle λ. This distance is shown in bold lines intermitted by small squares;

— Distance m stretches between the two points of the footprint that are furthest apart from each other. Distance m will be perpendicular to the walls after the wheelchair has turned to the left for angle μ. Distance m is shown in bold lines intermitted by circles;

— Distance n stretches between wheelchair centre-point C and that point of the footprint, which is in front and to the left of C and most remote from it. Distance n will be perpendicular to the walls after the wheelchair has turned to the left for angle ν. Distance n is shown in bold lines intermitted by asterisks.

NOTE 1 The end points of distances l and n are usually very close to but not identical to the end points of distance m.

標準檢驗局
內部公務使用

© ISO 2008 – All rights reserved

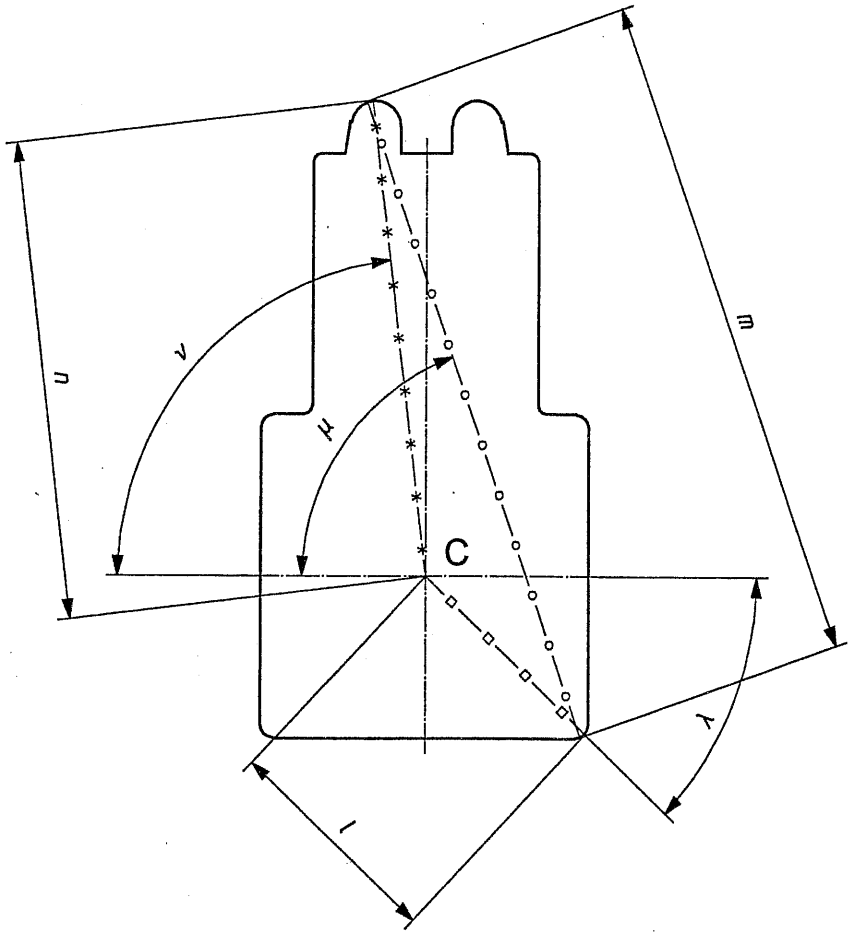

Figure B.1 — Footprint of a typical wheelchair with full differential steering
(example with manual wheelchair)

When an experienced occupant executes a turning manoeuvre between limiting walls, the front part of the wheelchair will swing around without any visible deviation from a smooth and unidirectional move. Intuitively, the occupant will correct the position of the wheelchair by using small steering manoeuvres which adapts the position of the wheelchair between the walls.

The turning manoeuvre is performed as follows:

NOTE 2 For the sake of demonstration, it is assumed that the distance between the adjustable walls is already reduced to the pivot width.

The first half of the turning manoeuvre is described below and shown in Figure B.2 a) to f).

a) The wheelchair is placed between and parallel to the walls. The turning manoeuvre can be started at any point, but it will need some drive to reach the best starting position from which it can be executed with a minimum of travel. The best starting position is with C the distance l away from the right wall to provide sufficient space for a free turn (C is at location 1 which is shown in the middle of each sketch and in magnified view below).

b) The wheelchair turns about C (with C still on location 1) allowing its right rear end to pass by very close to the right wall after a turn of angle λ (distance l is perpendicular to the wall). Distance l is shown in bold lines intermitted by squares.

標準檢驗局
內部公務使用

© ISO 2008 – All rights reserved

c) The wheelchair continues to turn about point C (which is still on location 1) until the left front end touches the left wall. During the following turning manoeuvre, C moves along the V-shaped line (which is shown in the middle of the sketch and in magnified view below) while the front part of the wheelchair slides along the left wall.

d) This turning manoeuvre continues until C reaches location 2 and after the wheelchair has turned for angle μ. Both end points of distance m touch the walls at the same time. Hence, the pivot width is equal to the distance m. Distance m is shown in bold lines intermitted by circles. If the walls are further apart so that the wheelchair cannot touch both walls at the same time, the minimum pivot width is not yet achieved.

e) The turning manoeuvre continues with C moving along the V-shaped line and with the front end of the wheelchair sliding along the left wall until C reaches location 3 after a turn of angle ν. The wheelchair centre-point is the distance n away from the left wall. The front part of the wheelchair is no longer hindered by the wall from turning freely. Distance n is shown in bold lines intermitted by asterisks.

f) A further turn of the wheelchair about C (with C on location 3) brings it to a position that is perpendicular to the walls. The first half of the turning manoeuvre (90°) is completed.

Since a symmetrical pattern of the turning manoeuvre is used, the first half of the turning manoeuvre could be mirrored to show the respective positions of the wheelchair during its second half. The second half of the turning manoeuvre is not shown in the sketch. During the second half of the turning manoeuvre, C will move from location 3 via 4 to 5.

Since $l + m - n = o$, the distance between location 1 and location 3 is also o when measured perpendicular to the walls [see Figure B.2 f)].

At the end of the whole turning manoeuvre the wheelchair is again parallel to the walls but has turned around by 180°.

To demonstrate the whole drive pattern of the wheelchair, the paths of two prominent wheelchair points are shown:

— the wheelchair centre-point C moving along the V-shaped line from location 1 via 2, 3 and 4 to 5;

— the middle of the foot support moving along the bowed line that is shown as a bold dash-dot line.

標準檢驗局
內部公務使用

© ISO 2008 – All rights reserved

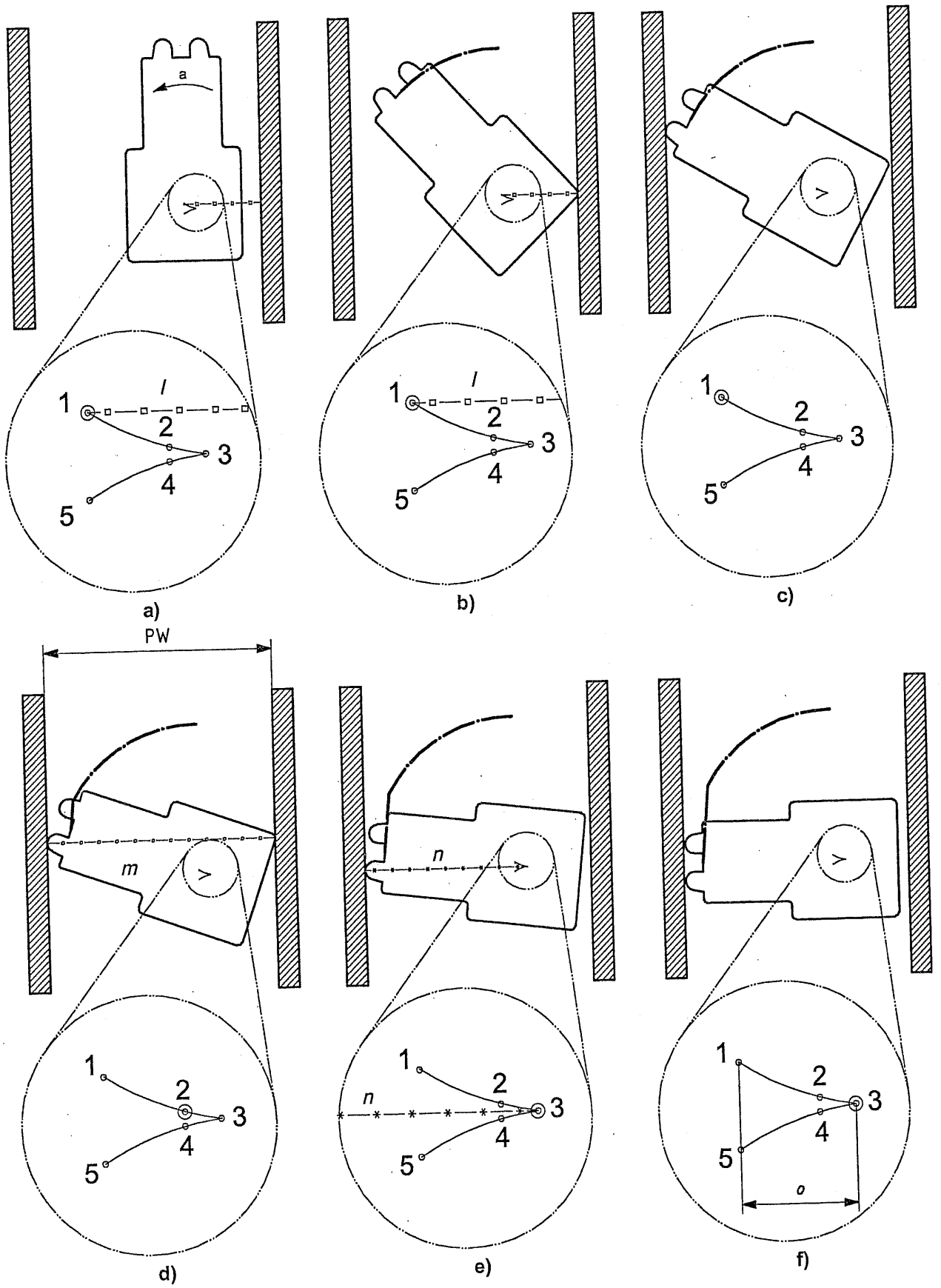

Key

PW = pivot width

a Start.

Figure B.2 — Pivot width (example with manual wheelchair)

標準檢驗局
內部公務使用

© ISO 2008 – All rights reserved

標準檢驗局
內部公務使用

B.3 Reversing width

B.3.1 General

Reversing width, RW, is applicable for wheelchairs with direct steering or limited differential steering only.

B.3.2 Identification of minimum radius, R

B.3.2.1 General

The minimum radius, R, of the trace of the wheelchair centre-point C (distance measured between C and the nearest midpoint M of turning) is dependant on the type of steering and is derived as described in B.3.2.2 and B.3.2.3.

B.3.2.2 Wheelchairs with direct steering

The minimum radius, R_{DIR}, of a typical wheelchair with direct steering can be derived from Figure C.1

When the inner pivot wheel or pivot drive wheel is at maximum steering angle:

$$R_{DIR} = \frac{g}{\tan\sigma} + h$$

where

R_{DIR} is the radius of the path of C when turning about M;

g is the distance between G and the axis of the fixed wheels;

σ is the maximum steering angle of the inner pivot wheel with the front in the lateral direction, in degrees;

h is the distance between G and the wheelchair longitudinal axis.

(C is the wheelchair centre-point, M is the midpoint of the turn, G is the ground contact point of the inner pivot wheel when its steering angle is at its maximum.)

B.3.2.3 Wheelchairs with limited differential steering

The minimum radius, $R_{LIM\,DIF}$, of a typical wheelchair with direct steering can be derived from Figure C.2.

When the difference between speed of inner and outer manoeuvring wheel is at its maximum:

$$R_{LIM\,DIF} = \frac{t(v_o + v_i)}{2(v_o - v_i)}$$

where

$R_{LIM\,DIF}$ is the radius of the path of C when turning about M;

t is the track of the manoeuvring wheels;

v_o is the speed of the outer manoeuvring wheel;

v_i is the speed of the inner manoeuvring wheel.

© ISO 2008 – All rights reserved

B.3.3 Identification of important points, distances and angles of the wheelchair

The reversing manoeuvre is the same for wheelchairs with both direct steering and limited differential steering.

The shape of the footprint (all dimensions are projected to the test plane) of a typical occupied wheelchair is known from field experience. The full occupied length, FOL, and occupied width, OW, are derived from Clauses A.8 and A.10 respectively.

The following characteristics of the wheelchair are important for the reversing width, RW (see Figure B.3):

j is the distance M-J;

f is the distance M-F;

R is the radius of the path of C when turning about M (either R_{DIR} or $R_{LIM\ DIF}$);

ε is the angle C-M-E;

e is the distance M-E;

κ is the angle C-M-K;

k is the distance M-K;

F, E, J and K are the four points of the occupied wheelchair that come in contact with the walls.

(C is the wheelchair centre-point, M is the midpoint of turn.)

標準檢驗局
內部公務使用

© ISO 2008 – All rights reserved

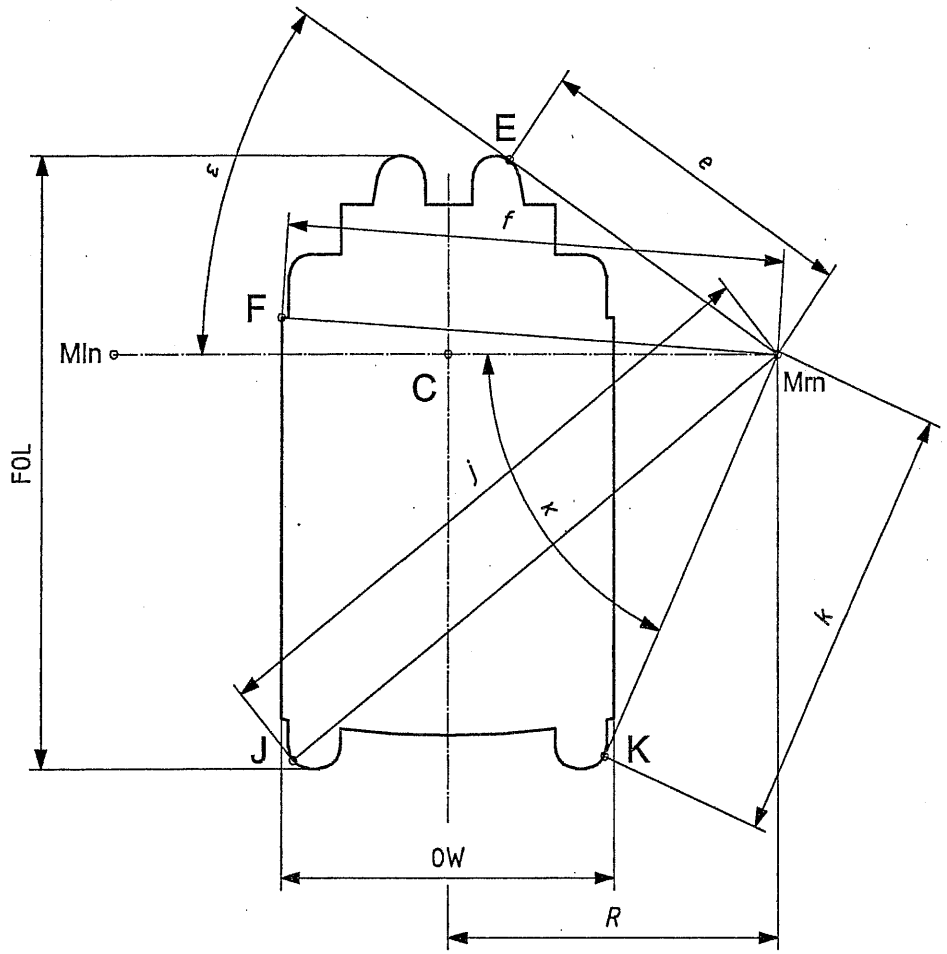

Key

C	wheelchair centre-point
E, F, J, K	points that come in contact with the walls
e, f, j, k	distances between M and respective points
ε, κ	angles C-M-E and C-M-K respectively
Mrn	midpoint of turn, right nearest
Mln	midpoint of turn, left nearest
FOL	full occupied length
OW	occupied width
R	radius of the path of C when turning about M

NOTE Sketch in top view with the forward direction pointing to the top.

Figure B.3 — Footprint of a typical wheelchair with direct steering
(example with electrically powered wheelchair)

標準檢驗局
內部公務使用

© ISO 2008 – All rights reserved

B.3.4 Determination of reversing width

B.3.4.1 Practical trial

When executing the practical trial for reversing width, RW, the wheelchair travels along a pattern as explained in a) to f) and as shown in the corresponding Figure B.4 a) to f).

a) The wheelchair is positioned between and parallel to the walls. The best starting position for the first manoeuvre is with the wheelchair's right nearest midpoint M1 for the initial forward drive at a distance from the left wall that is equal to the distance *j*.

b) Hence, the wheelchair performs its first manoeuvre (which is the initial forward drive) so that its point J passes by at the left wall. J is that point of the footprint which is to the left and to the rear of C and most remote from M1.

c) The wheelchair turns about M1 until it touches the right wall with front point E.

d) It follows the second manoeuvre, which is the one and only rearward drive. The wheelchair turns about the left nearest midpoint M2 until the wheelchair touches the left wall with rear point K.

e) Then the wheelchair performs its third manoeuvre, which is the final forward drive. The wheelchair turns about its right nearest midpoint M3. When the location of M3 is the distance, *f*, apart from the right wall, point F can pass by at the right wall without wasting space and without hitting the walls. F is that point of the footprint which is to the left and in front of C and most remote from M3.

f) The wheelchair completes the 180° reversing manoeuvre.

標準檢驗局
內部公務使用

© ISO 2008 – All rights reserved

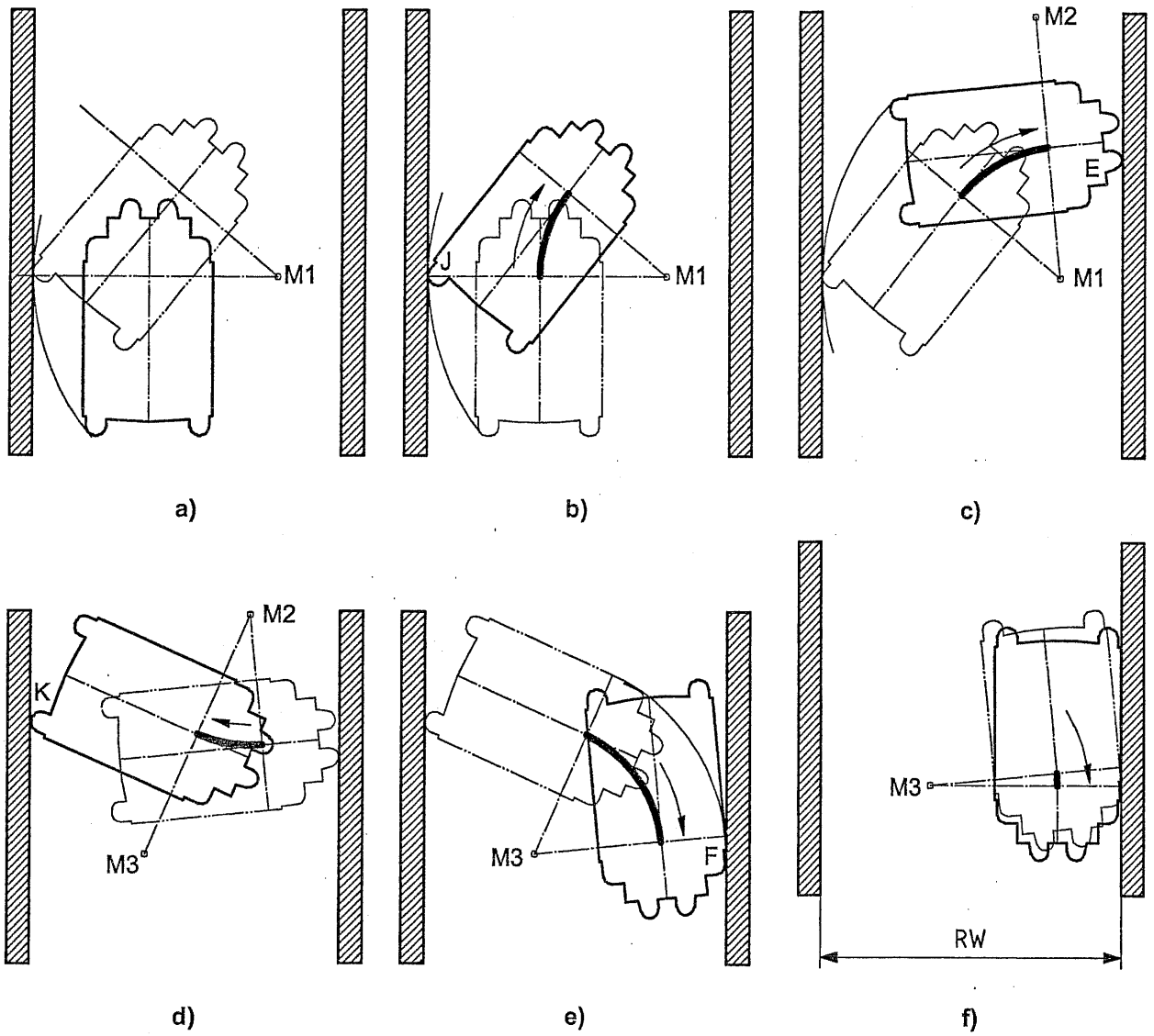

Key

a) to f)	sequence of manoeuvres
E, F, J, K	points that come in contact with the walls
M1 to M3	midpoints of the three turning manoeuvres
RW	reversing width

Figure B.4 — Reversing width
(example with electrically powered wheelchair)

標準檢驗局
內部公務使用

© ISO 2008 – All rights reserved

B.3.4.2 Mathematical approach

The reversing width expressed in mathematical notation is given by:

$$\mathrm{RW} = j + f - 2R\cos\left(180° - \varepsilon - \arccos\frac{\mathrm{RW} - j}{e}\right) - 2R\cos\left(180° - \kappa - \arccos\frac{\mathrm{RW} - f}{k}\right)$$

where

RW is the reversing width;

j is the distance M-J;

f is the distance M-F;

R is the radius of the path of C when turning about M (either R_{DIR} or $R_{\mathrm{LIM\ DIF}}$);

ε is the angle C-M-E;

e is the distance M-E;

κ is the angle C-M-K;

k is the distance M-K.

(E, F, J and K are the four points of the occupied wheelchair that come in contact with the walls, C is the wheelchair centre-point, M is the midpoint of the manoeuvres.)

標準檢驗局
內部公務使用

© ISO 2008 – All rights reserved

標準檢驗局
內部公務使用

Annex C
(informative)

Turning diameter

C.1 General

This annex gives mathematical assumptions about the turning diameters of wheelchairs with various steering concepts and how the minimum values can be achieved.

C.2 Direct steering

The turning diameter, TD_{DIR}, of a wheelchair with

— direct steering,

— symmetrical construction without any wheel misalignment,

— pivot wheels or pivot drive wheels which are vertical and pivot about vertical axes and

— all dimensions projected to the test plane (show the footprint of the occupied wheelchair)

is calculated as follows:

$$TD_{\mathrm{DIR}} = 2 \times \sqrt{\left(y + h + \frac{g}{\tan\sigma}\right)^2 + x^2}$$

where

TD_{DIR} is the turning diameter for wheelchairs with direct steering, equal to double the distance between M and W (see Figure C.1);

y is the distance between W and wheelchair longitudinal axis;

h is the distance between G and wheelchair longitudinal axis;

g is the distance between G and the axis of the fixed wheels;

σ is the maximum steering angle of the inner pivot wheel (in degrees) with the front in the lateral direction;

x is the distance between W and the axis of the fixed wheels.

In addition, the following symbols are used:

C is the wheelchair centre-point;

M is the midpoint of the turn;

W is the point of the occupied wheelchair that is most remote from M;

G is the ground contact point of the inner pivot wheel when the steering angle is at its maximum with the front in the lateral direction.

© ISO 2008 – All rights reserved

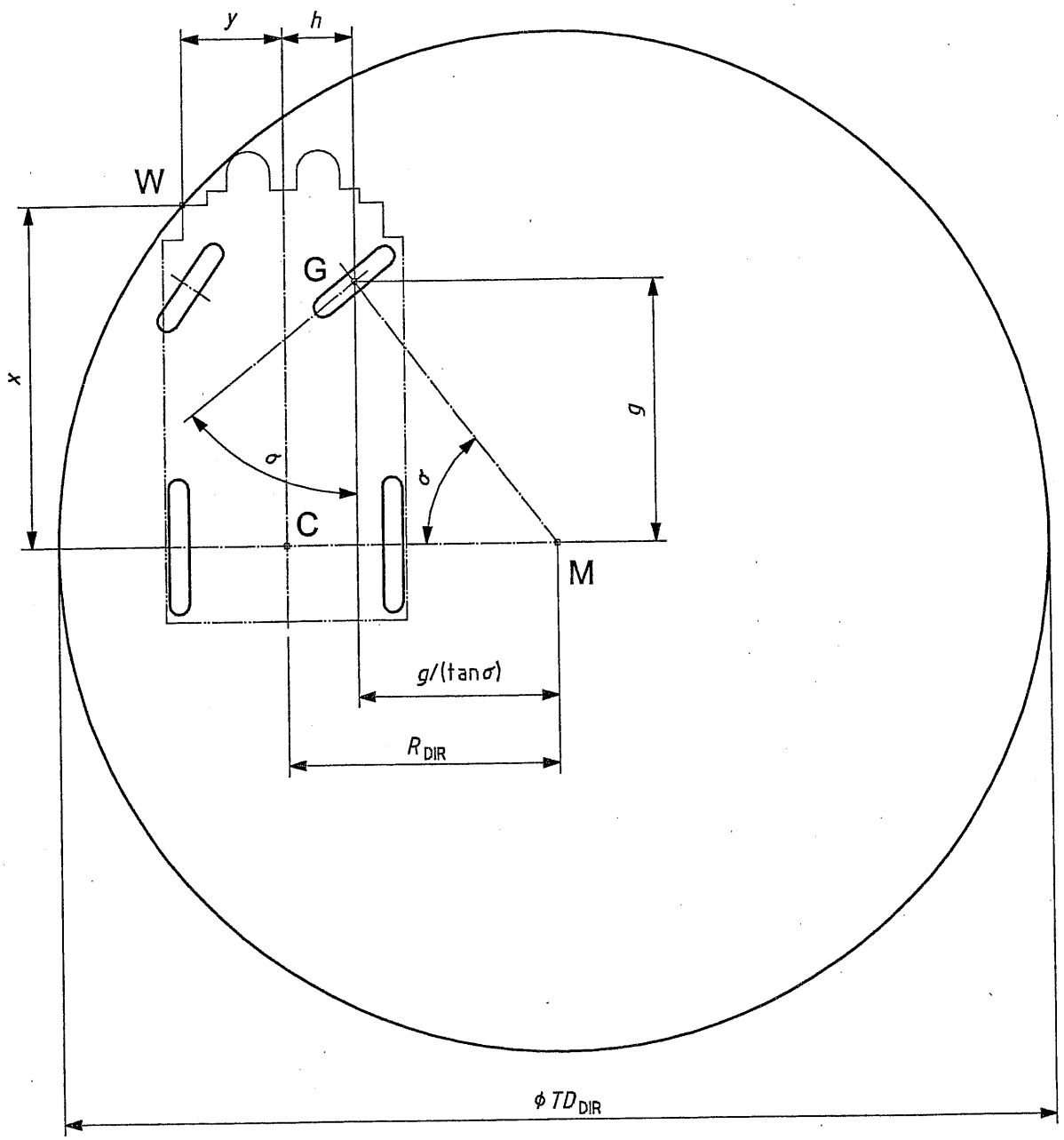

Figure C.1 — Turning diameter of a wheelchair with direct steering

C.3 Limited differential steering

The minimum turning diameter, $TD_{\text{LIM DIF}}$, of a wheelchair with

標準檢驗局
內部公務使用

— limited differential steering,

— symmetrical construction without any wheel misalignment,

— castor wheels which are vertical and pivot about vertical castor axes and

— all dimensions projected to the test plane (show the footprint of the occupied wheelchair)

© ISO 2008 – All rights reserved

is calculated as follows:

$$TD_{\text{LIM DIF}} = 2 \times \sqrt{\left(\frac{t(v_{\text{o}} + v_{\text{i}})}{2(v_{\text{o}} - v_{\text{i}})} + y\right)^2 + x^2}$$

where

$TD_{\text{LIM DIF}}$ is the minimum turning diameter for a wheelchair with limited differential steering, equal to double the distance between M and W (see Figure C.2);

t is the wheel track of the manoeuvring wheels;

v_{o} is the speed of the outer manoeuvring wheel;

v_{i} is the speed of the inner manoeuvring wheel;

y is the distance between W and wheelchair longitudinal axis;

x is the distance between W and axis of manoeuvring wheels.

In addition, the following symbols are used:

C is the wheelchair centre-point;

M is the midpoint of the turning circle;

W is the point of the footprint of the occupied wheelchair that is most remote from M.

標準檢驗局
內部公務使用

© ISO 2008 – All rights reserved

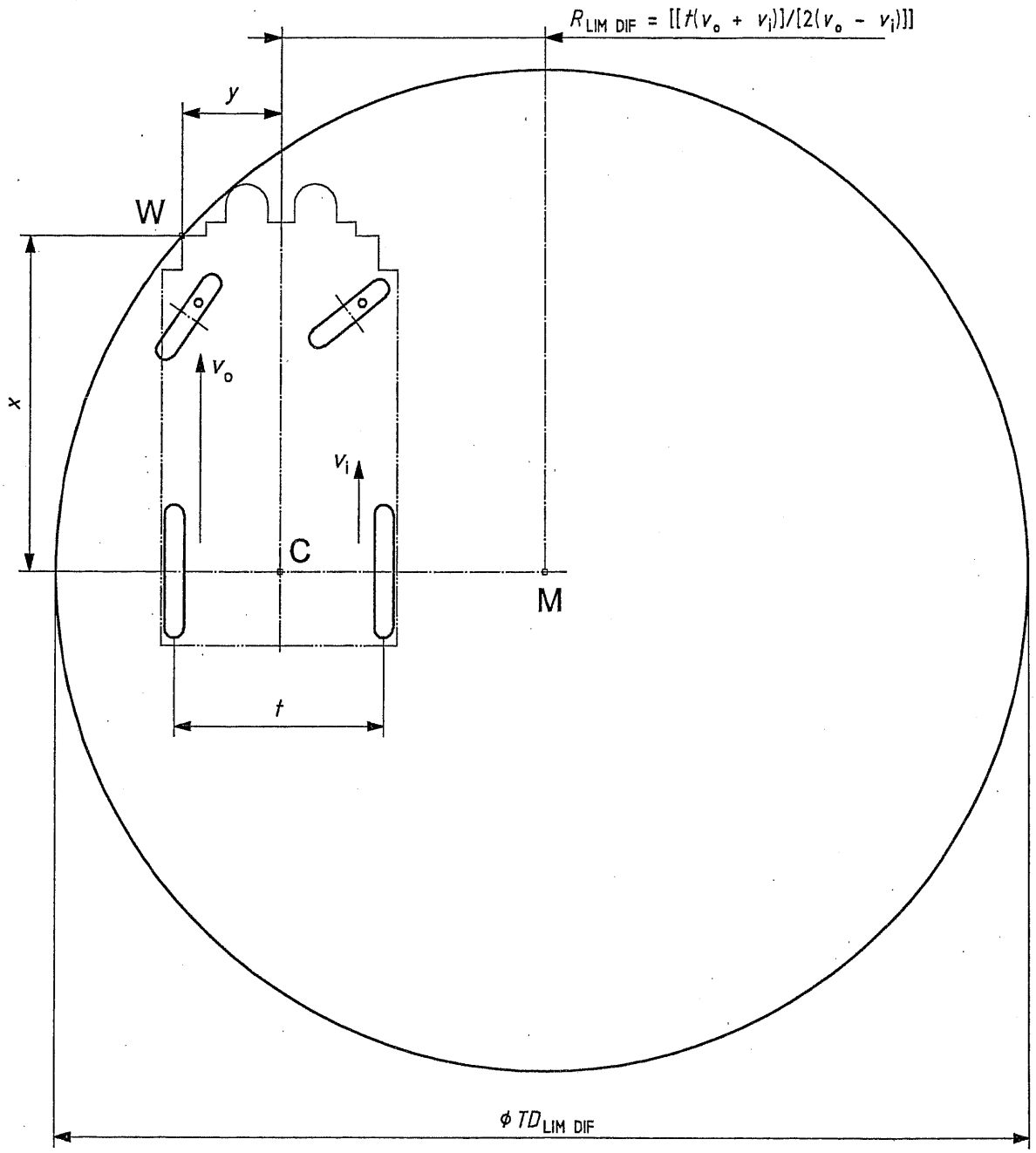

Figure C.2 — Turning diameter of a wheelchair with limited differential steering

標準檢驗局
內部公務使用

© ISO 2008 – All rights reserved

標準檢驗局
內部公務使用

C.4 Full differential steering

For a wheelchair with full differential steering, the situation is much simpler (see Figure C.3). In this case it is possible that the forward speed of one manoeuvring wheel equals the rearward speed of the other manoeuvring wheel ($+v_o = -v_i$). Hence, the formula given in Clause C.3 simplifies to:

$$TD_{\text{FULL DIF}} = 2 \times \sqrt{y^2 + x^2}$$

because the midpoint M of the smallest turning circle coincides with the wheelchair centre-point C.

NOTE Point W, the footprint point that is most remote from M, can be a different one from that of the turning diameter for a wheelchair with limited differential steering.

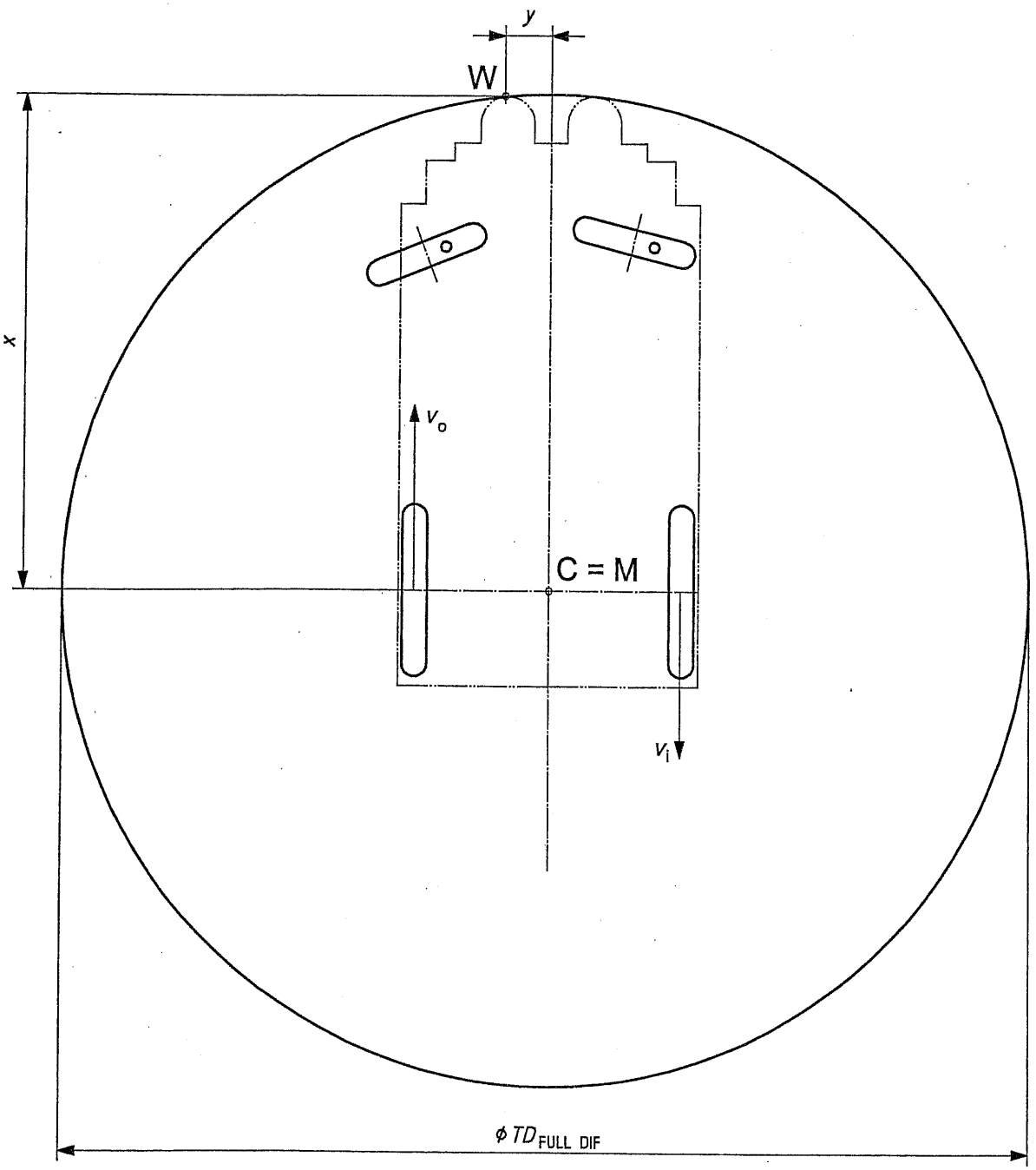

Figure C.3 — Turning diameter of a wheelchair with full differential steering

© ISO 2008 – All rights reserved

標準檢驗局
內部公務使用

Annex D
(informative)

Wheelchair longitudinal axis and wheelchair centre-point

This annex explains how to locate the wheelchair longitudinal axis (see 3.44) and the wheelchair centre-point (see 3.43) on wheelchairs that have any misalignment (toe and/or skew) of their fixed wheels.

In common practice the wheelchair centre-point is identified first and the wheelchair longitudinal axis is then identified as a horizontal line that runs through it in the fore/aft direction. The definitions given in 3.43 and 3.44 reflect this conception and specify the wheelchair longitudinal axis in relation to wheelchair centre-point.

Since state of the art wheelchairs have fixed wheels without any misalignment of toe or skew, these definitions apply. But when considering a wheelchair with wheel misalignments such as toe and skew, the wheelchair longitudinal axis is identified first with respect to the fixed wheels and the wheelchair centre-point is then located on the wheelchair longitudinal axis depending on the wheel's position and orientation.

NOTE 1 The location of the castor wheels has no influence on the position of wheelchair longitudinal axis and wheelchair centre-point.

The following scientific explanations consider the case of a wheelchair with unwanted appearance of wheel misalignments. They do not conflict with the definitions in 3.43 and 3.44 which express the situation of good manufacturing practise without any wheel misalignment.

Wheelchair longitudinal axis (scientific explanation)

The wheelchair longitudinal axis is the horizontal line which halves the angle between lines that pass through the most forward and most rearward points of the wheel median lines of the fixed wheels (see Figure D.1).

Wheelchair centre-point (scientific explanation)

The wheelchair centre-point is the point half way between the points of intersection of the axes of the fixed wheels with the wheelchair longitudinal axis (see Figure D.1).

NOTE 2 In this example, the wheelchair is assumed to have no camber.

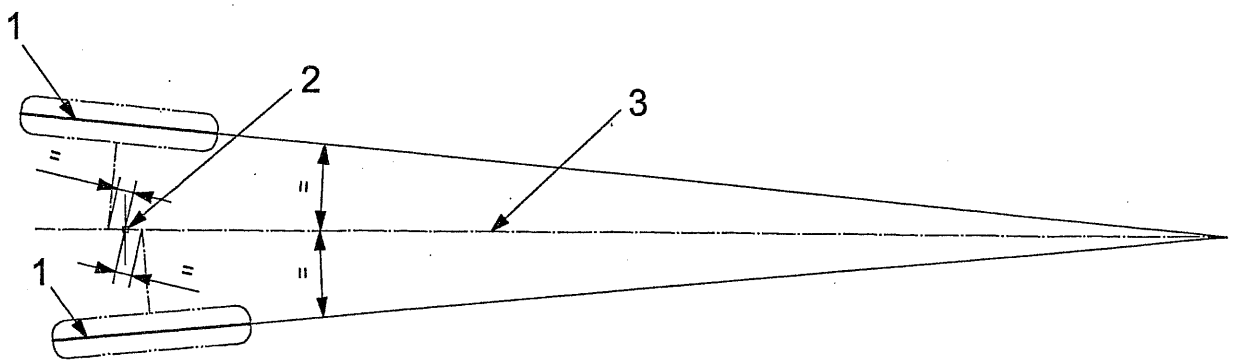

Key

1 wheel medians
2 wheelchair centre-point
3 wheelchair longitudinal axis

Figure D.1 — Wheelchair longitudinal axis and wheelchair centre-point
(toe and skew exaggerated)

© ISO 2008 – All rights reserved

標準檢驗局
內部公務使用

Annex E
(informative)

Guidelines and recommendations for wheelchair design and performance

E.1 Camber

Some manual wheelchairs have a negative camber. Camber is used to increase stability and provide better ergonomic features when driving. It can also help to protect the hands of the occupant of a handrim-propelled wheelchair in narrow spaces and at sports activities. When negative camber is too great, the wheelchair could become too wide.

It is recommended to avoid any asymmetry between left and right camber for better ergonomic performance of manual wheelchair propulsion.

E.2 Castor cant

The vertical position of the castor cant is very important for the performance of steering and driving as well as for the prevention of castor shimmy and for the tracking behaviour. It is strongly recommended to avoid any deviation from the vertical when making, repairing, setting up or adjusting a wheelchair. When the front part of the wheelchair is risen to different heights on the left and right sides of the wheelchair when making any vertical adjustments of wheels or castor assembly, this will also result in a castor cant and hence in a sideways veering out of the wheelchair. A castor wheel with a positive castor cant veers in the lateral direction. A castor wheel with a negative castor cant veers in the medial direction.

It is also strongly recommended to avoid any asymmetry between the castor cants of left and right castor wheels. Asymmetry between left and right castor cants indicates the lack of compensation of the adverse effects of the misalignments from both the castor wheels. Even compensated, any castor cants will result in higher tyre friction, increased drive power consumption and excessive castor shimmy.

E.3 Castor rake

The vertical position of the castor rake is very important for the performance of steering and driving as well as for the prevention of castor shimmy and for the tracking behaviour. It is strongly recommended to avoid any deviation from the vertical when making, repairing, setting up or even adjusting a wheelchair. A negative castor rake is worse than a positive angle. It is also strongly recommended to avoid any difference between the castor rakes of left and right castor wheels. Some manual wheelchairs have manoeuvring wheels that can be positioned on the frame at several places and therefore require means for compensation to keep the castor stem vertical. Some electrically powered wheelchairs use a slightly positive castor rake for better tracking behaviour of the wheelchair. Any castor rake indicates increased power consumption for steering and tracking, with a negative castor rake adding the adverse effect of increased tendency for castor shimmy. Difference between left and right castor rakes indicates the lack of compensation of the adverse effects of these misalignments from both castor wheels.

E.4 Castor trail

The castor trail is necessary for the performance of castor wheels. It is recommended to avoid a greater difference between left and right castor trail.

© ISO 2008 – All rights reserved

標準檢驗局
內部公務使用

E.5 Castor wheel misalignment

This clause refers to 3.1.

The prevention of any castor wheel misalignment is necessary for the performance of steering and driving as well as for the prevention of castor shimmy and for the tracking behaviour. A negative castor wheel misalignment is deemed to be worse than a positive one. It is strongly recommended to avoid any castor wheel misalignment when making, repairing, setting up or adjusting the wheelchair. It is also strongly recommended to avoid any asymmetry between left and right castor wheel misalignment. Castor wheels with castor wheel misalignment tend to veer out from the desired direction. Additional drive power is consumed to compensate for this deviation.

A castor wheel with a negative castor wheel misalignment veers to the lateral direction, a castor wheel with a positive castor wheel misalignment veers to the medial direction.

Asymmetry between left and right castor wheel misalignment indicates the lack of compensation against the adverse effects of veering out. Even compensated, any castor wheel misalignment will result in higher tyre friction, increased drive power consumption and excessive castor shimmy.

E.6 Ground clearance

This clause refers to 3.6.

The ground clearance is an indication of the capability of the wheelchair to negotiate obstacles.

E.7 Lateral wheel deviation

This clause refers to 3.11.

The prevention of any lateral wheel deviation is important for the performance of the wheelchair. It is strongly recommended to avoid any lateral wheel deviation when making, repairing, setting up or even adjusting a wheelchair.

E.8 Pivot width

This clause refers to 3.16.

The pivot width is intended as a clinical dimension to estimate the space needed in daily life situations.

E.9 Radial wheel deviation

This clause refers to 3.18.

The prevention of any radial wheel deviation is important for the performance of the wheelchair. It is strongly recommended to avoid any radial wheel deviation when making, repairing, setting up or even adjusting a wheelchair.

E.10 Required corridor width for side opening

This clause refers to 3.23.

The required corridor width for side opening is intended to estimate the space needed in daily life situations. It is dependant on the opening width and the wheelchair's appearance.

© ISO 2008 – All rights reserved

標準檢驗局
內部公務使用

E.11 Required doorway entry depth

This clause refers to 3.24.

The required doorway entry depth is intended to estimate the space needed in daily life situations.

E.12 Required width of angled corridor

This clause refers to 3.25.

The required width of angled corridor is intended to estimate the space needed in daily life situations.

E.13 Reversing width

This clause refers to 3.26.

The reversing width is intended to estimate the space needed in daily life situations.

E.14 Rising

This clause refers to 3.27.

The rising provides information about the effectiveness of anti-tip devices and the capability of the wheelchair to overcome small obstacles (such as thresholds).

E.15 Skew

This clause refers to 3.28.

The prevention of skew is very important for the performance of steering. It is strongly recommended to avoid any skew when making, repairing, setting up or even adjusting a wheelchair. The adverse effects of a wheelchair with skew are higher steering forces required, increased power consumption when driving in curves, excessive tyre wear, ergonomic discomfort on handrim-propelled wheelchairs and difficulty in keeping a smooth drive when driving along curved paths.

E.16 Toe

The prevention of any toe is very important for the performance of steering and driving. It is strongly recommended to avoid any toe when making, repairing, setting up or even adjusting a wheelchair. A negative toe is worse than a positive toe. The adverse effects of a wheelchair with toe are higher tyre friction and increased drive power consumption. In addition, a positive toe on one wheel compensated by a negative toe on the other wheel usually results in the adverse misalignment of skew.

E.17 Turning diameter

The midpoint of turning will always lie on the axis of the fixed wheels. It will be more or less close to the wheelchair centre-point. Some wheelchairs can turn about a very near midpoint of turning while others can only turn about a more remote point. Wheelchairs with full differential steering can turn with the midpoint of turning lying at the wheelchair centre-point. Wheelchairs with direct steering have their midpoint of turning at the point of intersection between axis of fixed wheels and axis of steering wheels when the steering wheels are in their most extreme steering position.

© ISO 2008 – All rights reserved

E.18 Wheelbase

This clause refers to 3.30.

Wheelbase difference is an indication for increased likelihood of the adverse effects of skew (see A.18) and/or castor rake (see A.19).

標準檢驗局
內部公務使用

© ISO 2008 – All rights reserved

Bibliography

[1] ISO/TR 13570-1, *Wheelchairs — Part 1: Guidelines for the application of the ISO 7176 series on wheelchairs*

[2] ISO/TR 13570-2, *Wheelchairs — Part 2: Typical values and recommended limits or dimensions, mass and manoeuvring space as determined in ISO 7176-5*

[3] DIN 33402-1, *Body dimensions of people; terms and definitions, measuring procedures*

標準檢驗局
內部公務使用

© ISO 2008 – All rights reserved

標準檢驗局
172225

標準檢驗局
內部公務使用

ICS 11.180.10
Price based on 79 pages

© ISO 2008 – All rights reserved