INTERNATIONAL STANDARD

ISO 7176-1

Third edition
2014-10-01

Wheelchairs —

Part 1: Determination of static stability

Fauteuils roulants —

Partie 1: Détermination de la stabilité statique

標準檢驗局
內部公務使用

經濟部標準檢驗局
103. 11. 26
資料中心

Reference number
ISO 7176-1:2014(E)

© ISO 2014

標準檢驗局
內部公務使用

COPYRIGHT PROTECTED DOCUMENT

© ISO 2014

All rights reserved. Unless otherwise specified, no part of this publication may be reproduced or utilized otherwise in any form or by any means, electronic or mechanical, including photocopying, or posting on the internet or an intranet, without prior written permission. Permission can be requested from either ISO at the address below or ISO's member body in the country of the requester.

ISO copyright office
Case postale 56 • CH-1211 Geneva 20
Tel. + 41 22 749 01 11
Fax + 41 22 749 09 47
E-mail copyright@iso.org
Web www.iso.org

Published in Switzerland

© ISO 2014 – All rights reserved

Contents

Page

Foreword ... iv
Introduction ... vi
1 Scope ... 1
2 Normative references ... 1
3 Terms and definitions ... 1
4 Principles ... 2
4.1 Static stability ... 2
4.2 Effectiveness of anti-tip devices ... 4
5 Apparatus ... 4
6 Set-up procedure ... 5
7 General test procedure ... 6
8 Test for static stability in the forward direction ... 6
8.1 General ... 6
8.2 Wheels unlocked and the wheelchair in the least stable configuration ... 7
8.3 Downhill wheels locked and the wheelchair in the least stable configuration ... 8
8.4 Wheels unlocked and the wheelchair in the most stable configuration ... 10
8.5 Downhill wheels locked and the wheelchair in the most stable configuration ... 11
9 Test for static stability in the rearward direction ... 11
9.1 General ... 11
9.2 Wheels unlocked and the wheelchair in the least stable configuration ... 12
9.3 Wheels locked and the wheelchair in the least stable configuration ... 13
9.4 Wheels unlocked and the wheelchair in the most stable configuration ... 15
9.5 Wheels locked and the wheelchair in the most stable configuration ... 15
10 Test for static stability, lateral orientation ... 15
10.1 General ... 15
10.2 Wheelchair in the least stable configuration ... 16
10.3 Wheelchair in the most stable configuration ... 21
11 Test for static stability with forward or rearward anti-tip devices ... 21
11.1 General ... 21
11.2 Anti-tip devices in the least effective configuration ... 21
11.3 Anti-tip devices in the most effective configuration ... 24
11.4 Test for effectiveness of anti-tip devices ... 25
12 Test report ... 26
13 Information disclosure ... 27
Annex A (informative) **Means to prevent wheels or posts from sliding** ... 28

標準檢驗局
內部公務使用

© ISO 2014 – All rights reserved

標準檢驗局
內部公務使用

Foreword

ISO (the International Organization for Standardization) is a worldwide federation of national standards bodies (ISO member bodies). The work of preparing International Standards is normally carried out through ISO technical committees. Each member body interested in a subject for which a technical committee has been established has the right to be represented on that committee. International organizations, governmental and non-governmental, in liaison with ISO, also take part in the work. ISO collaborates closely with the International Electrotechnical Commission (IEC) on all matters of electrotechnical standardization.

The procedures used to develop this document and those intended for its further maintenance are described in the ISO/IEC Directives, Part 1. In particular the different approval criteria needed for the different types of ISO documents should be noted. This document was drafted in accordance with the editorial rules of the ISO/IEC Directives, Part 2 (see www.iso.org/directives).

Attention is drawn to the possibility that some of the elements of this document may be the subject of patent rights. ISO shall not be held responsible for identifying any or all such patent rights. Details of any patent rights identified during the development of the document will be in the Introduction and/or on the ISO list of patent declarations received (see www.iso.org/patents).

Any trade name used in this document is information given for the convenience of users and does not constitute an endorsement.

For an explanation on the meaning of ISO specific terms and expressions related to conformity assessment, as well as information about ISO's adherence to the WTO principles in the Technical Barriers to Trade (TBT) see the following URL: Foreword - Supplementary information

The committee responsible for this document is ISO/TC 173, *Assistive products for persons with disability*, Subcommittee SC 1, *Wheelchairs*.

This third edition cancels and replaces the second edition (ISO 7176-1:1999), all clauses, sub-clauses, tables, figures, and annexes of which have been technically revised.

ISO 7176 consists of the following parts, under the general title *Wheelchairs*:

— *Part 1: Determination of static stability*

— *Part 2: Determination of dynamic stability of electric wheelchairs*

— *Part 3: Determination of effectiveness of brakes*

— *Part 4: Energy consumption of electric wheelchairs and scooters for determination of theoretical distance range*

— *Part 5: Determination of dimensions, mass and manoeuvring space*

— *Part 6: Determination of maximum speed, acceleration and deceleration of electric wheelchairs*

— *Part 7: Measurement of seating and wheel dimensions*

— *Part 8: Requirements and test methods for static, impact and fatigue strengths*

— *Part 9: Climatic tests for electric wheelchairs*

— *Part 10: Determination of obstacle-climbing ability of electrically powered wheelchairs*

— *Part 11: Test dummies*

— *Part 13: Determination of coefficient of friction of test surfaces*

— *Part 14: Power and control systems for electrically powered wheelchairs and scooters — Requirements and test methods*

 © ISO 2014 – All rights reserved

— *Part 15: Requirements for information disclosure, documentation and labelling*

— *Part 16: Resistance to ignition of postural support devices*

— *Part 19: Wheeled mobility devices for use as seats in motor vehicles*

— *Part 21: Requirements and test methods for electromagnetic compatibility of electrically powered wheelchairs and scooters, and battery chargers*

— *Part 22: Set-up procedures*

— *Part 25: Batteries and chargers for powered wheelchairs*

— *Part 26: Vocabulary*

— *Part 28: Requirements and test methods for stair-climbing devices*

A Technical Report (ISO/TR 13570-1) is also available giving a simplified explanation of these parts of ISO 7176.

標準檢驗局
內部公務使用

© ISO 2014 – All rights reserved

Introduction

It is important to know the static-stability characteristics of a wheelchair for prescription and adjustment purposes. Some occupants need large reserves of stability to ensure their safety while others prefer finely balanced wheelchairs which have better manoeuvrability. Static stability is only one factor affecting dynamic stability, others being the position of the wheelchair operator in the wheelchair, the skill of the wheelchair operator, the manner in which the wheelchair is propelled, and the environment in which the wheelchair is operated.

This part of ISO 7176 specifies tests in which static stability is measured with parking brake(s) applied, as is the case if the wheelchair is standing on a slope. Tests are also made with the wheels unlocked, simulating the situation where the wheelchair is standing on a slope with the wheels against obstacles, the situation on a level surface with the wheels unlocked and the wheelchair occupant reaching for an object, or instability while rolling. Tests are also made that determine the static stability of the wheelchair when it is protected against tipping over by a forward and/or rearward anti-tip device, and the effectiveness of those anti-tip devices if the wheelchair tips in that direction.

標準檢驗局
內部公務使用

© ISO 2014 – All rights reserved

Wheelchairs —

Part 1: Determination of static stability

標準檢驗局
內部公務使用

1 Scope

This part of ISO 7176 specifies test methods for determining the static stability of wheelchairs. It is applicable to manual and electrically powered wheelchairs, including scooters, with a maximum speed not greater than 15 km/h, intended to provide indoor and/or outdoor mobility for one disabled person whose mass is within the range represented by ISO 7176-11.

For active stability-controlled wheelchairs, this part of ISO 7176 applies to the device in a stable, parked state.

This part of ISO 7176 provides a method for the measurement of the tipping angles (either wheelchair tipping angle or anti-tip device tipping angle), but this method is not applicable to wheelchairs with lateral anti-tip devices and does not consider sliding on the ground.

This part of ISO 7176 also includes requirements for test reports and information disclosure.

2 Normative references

The following documents, in whole or in part, are normatively referenced in this document and are indispensable for its application. For dated references, only the edition cited applies. For undated references, the latest edition of the referenced document (including any amendments) applies.

ISO 7176-11, *Wheelchairs — Part 11: Test dummies*

ISO 7176-15, *Wheelchairs — Part 15: Requirements for information disclosure, documentation and labelling*

ISO 7176-22, *Wheelchairs — Part 22: Set-up procedures*

ISO 7176-26, *Wheelchairs — Part 26: Vocabulary*

3 Terms and definitions

For the purposes of this document, the terms and definitions in ISO 7176-26 and the following apply.

3.1
active stability-controlled wheelchair
wheelchair that actively controls or enhances its stability (by electronic or other means) when static and/or when in motion

3.2
anti-tip device
device which limits the extent of tipping of a wheelchair

Note 1 to entry: Anti-tip devices can operate in forward, rearward, or lateral directions. Some anti-tip devices have a spring suspension. Some running wheels can act as anti-tip devices, but their primary function is to be running wheels. Foot supports can serve as anti-tip devices if the manufacturer designates that they are intended to serve in that capacity. A change in the wheelchair configuration or control characteristics to enhance stability is not considered an anti-tip device.

© ISO 2014 – All rights reserved

3.3
anti-tip device tipping angle
angle of the test platform from the horizontal at which the wheelchair starts to tip about the anti-tip device

3.4
contact point
midpoint of the region of contact between a wheel or other part of the wheelchair and the ground

Note 1 to entry: In the test procedures specified in this part of ISO 7176, the ground can be the test platform or its covering that lies between the test platform and the wheel or the post.

3.5
force detection point
point at which the force under an uphill wheel is monitored

Note 1 to entry: This can be determined as the point at which a sheet of paper will slide between the wheel and the contact surface.

3.6
lockable wheel
wheel equipped with parking brake, or wheel whose rolling motion is prevented by the means of propulsion (e.g. by hands, levers, motors)

3.7
non-lockable wheel
wheel that is not a lockable wheel

標準檢驗局
內部公務使用

3.8
parked state
static position that will allow the occupant to transfer into or out of the seat

3.9
running wheel
wheel that normally runs on the surface while the wheelchair is travelling at a constant speed on a level surface

3.10
wheelchair tipping angle
angle of the test platform from the horizontal at which the vertical projection of the centre of mass moves outside of a polygon connecting the contact points of all the running wheels (to be assessed by empirical measure)

Note 1 to entry: The instant at which the wheelchair starts to tip is reached when the forces become zero under all uphill running wheels (i.e. one edge of the polygon lies directly below the centre of mass).

Note 2 to entry: A number of methods are available with which to determine when the forces become zero under the uphill wheels. These include, but are not limited to, the following: the ability to pull pieces of paper from beneath the wheels, visual identification of when the wheels lift from the test platform, or the use of force-sensing instrumentation.

4 Principles

4.1 Static stability

Theoretically, a loaded wheelchair is statically stable as long as the gravity force line from the centre of mass is inside the area on the ground that is confined by the outline of the contact points (see 3.4) of its wheels. Wheelchair stability increases as the angle between a vertical plane through the axis of tip and a plane that contains the centre of mass and the axis of tip increases. A wheelchair will tip when it is tilted beyond this measured angle (see Figure 1) about the axis of tip. The wheelchairs can either tip about the

© ISO 2014 – All rights reserved

contact point when the wheels are locked or about the wheel axle when the wheels are unlocked (see Figure 1).

Since the location of the centre of mass is not known, it is not possible to measure the tipping angle directly. Therefore it is determined with the wheelchair on an adjustable slope test platform. The angle of the slope on which the wheelchair starts to tip is measured. The angle of the test platform represents the tipping angle.

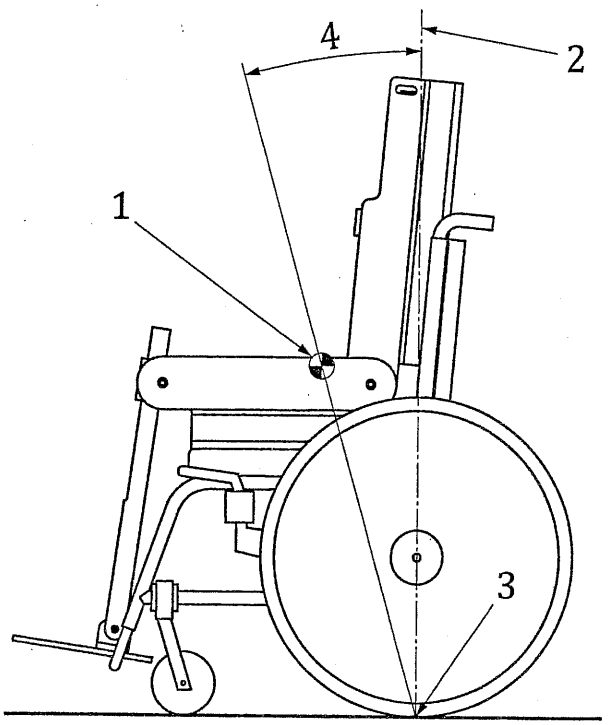

a) wheelchair with wheels locked

標準檢驗局
內部公務使用

© ISO 2014 – All rights reserved

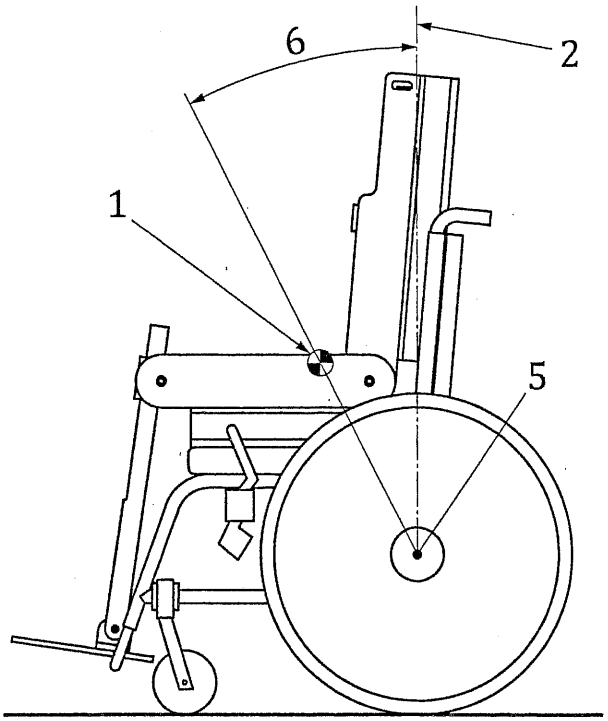

b) wheelchair with wheels unlocked

Key

1 centre of mass of wheelchair plus dummy
2 vertical
3 axis of tip when wheel is locked
4 wheelchair tipping angle when wheel is locked
5 axis of tip when wheel is unlocked
6 wheelchair tipping angle when wheel is unlocked

Figure 1 — Demonstration of wheelchair tipping angles (example in rearward direction)

In the case of a test with unlocked wheels, the axis of tip lies in the wheel axles, and the relevant centre of gravity is that of the loaded wheelchair excluding the mass of the unlocked wheels about the wheelchair tips.

NOTE Since this is a rather minor effect, it is not explicitly shown in the figures of this part of ISO 7176.

4.2 Effectiveness of anti-tip devices

The wheelchair is brought to a situation in which it is in unstable equilibrium about an axis between the two running wheels nearest the anti-tip device(s). From this state, the wheelchair should be able to freely tip until its anti-tip device(s) contact the test surface. It is observed whether the anti-tip device is capable of preventing the wheelchair from tipping over completely.

標準檢驗局
內部公務使用

5 Apparatus

5.1 Test platform, a flat, hard platform with adjustable slope that is large enough to accommodate the wheelchair to be tested, with a test surface that lies between two imaginary parallel planes 5 mm apart and has no more than 0,5° of variation in slope or cross slope throughout the test.

NOTE 1 The imaginary planes are intended to provide a measure of control on the flatness of the test platform.

© ISO 2014 – All rights reserved

NOTE 2 Visible lines parallel and normal to the hinge of the test platform can assist in positioning the wheelchair.

5.2 Means by which the slope of the test platform can be **adjusted**.

The slope of the test platform can be increased in a stepwise or continuous fashion. If the slope is increased in a stepwise fashion, during the last two to three degrees of slope inclination, the steps should not be greater than 0,5° and should not be so abrupt that they affect the validity of the tipping angle (either wheelchair tipping angle or anti-tip device tipping angle). Between the steps, pauses should be made that are long enough to allow settling of any rocking of the wheelchair. Any means to dampen rocking of the wheelchair should not be so that they affect the validity of the tipping angle (either wheelchair tipping angle or anti-tip device tipping angle). If otherwise the slope of the test platform is increased in a continuous fashion, during the last two to three degrees of slope inclination before the tipping angle is reached, the rate of increase in the slope should not exceed 0,5 °/s.

5.3 Roll restraint, a means to prevent an unlocked wheel or anti-tip device from rolling that does not affect the wheelchair's freedom to tip about the axle of the restrained wheel.

Roll restraint surfaces that contact a wheel shall be perpendicular to the test plane. The height of the roll restraint shall be sufficiently large to prevent rolling of the wheels during testing (see Figure 2).

NOTE Placing a rigid barrier in contact with the downhill wheels is an acceptable method for testing when the downhill wheels are unlocked.

5.4 Slide restraint, means to prevent a locked wheel or anti-tip device from sliding that does not affect the wheelchair's freedom to tip about the contact point (see 3.4) of the restrained wheel or post.

NOTE 1 See Annex A.

NOTE 2 Placing a rigid barrier in contact with the downhill wheels is not acceptable for the tests when the downhill wheels are locked, because it changes the axis of tip.

5.5 Tipping limiter, means to limit the extent of tipping of the wheelchair relative to the test platform that does not affect the stability of the wheelchair, restrict the wheelchair's freedom to deform, or restrict the wheelchair's freedom to tip sufficiently to detect a zero force under the uphill wheels of the wheelchair, or in the case of 11.2, from tipping onto its anti-tip wheels (see Figure 2).

5.6 Angular measurement device, means to measure the angle of the slope of the test platform with respect to the horizontal with an accuracy of ±0,5°.

5.7 Test dummy, as specified in ISO 7176-11.

5.8 Dummy securement, means to secure the torso, thigh, and lower leg portions of the test dummy as specified in ISO 7176-22.

6 Set-up procedure

標準檢驗局
內部公務使用

Set up the test wheelchair as specified in ISO 7176-22.

Select and fit a test dummy as specified in ISO 7176-22.

For active stability-controlled wheelchairs, where the manufacturer specifies that the wheelchair is stable only when the wheelchair is powered on, the tests should be conducted with power on and the systems active, and Table 4 annotated to note that the chair is unstable when powered off. In all other instances, the wheelchair should be tested both with systems active and when powered off to determine the least and most stable conditions. Ensure to record the appropriate setting for each result in Table 4.

© ISO 2014 – All rights reserved

Evaluation of the safety of active stability-controlled wheelchairs due to power shut down (commanded or not) while in use should be assessed in accord with ISO 7176-14.

Do not load the wheelchair with a human test occupant, except as approved for clinical evaluations.

All adjustments shall be within the effective range of adjustment specified by the manufacturer in the operator manual, a permanent affixed label on the wheelchair, or a physical barrier installed to prevent movement into that area.

NOTE During setup, 'uphill' and 'downhill' refer to directions when the test platform is inclined during the test.

7 General test procedure

The static stability tests are based on a common procedure that is modified to suit each test. The common test procedure is as follows.

a) Increase the slope of the test platform until the tipping angle (either wheelchair tipping angle or anti-tip device tipping angle) is reached, and then prevent further movement of the platform.

b) Ensure that the result is not affected by inadvertent contact between the wheelchair and the test equipment or floor.

c) Recheck the positions of the test dummy and wheelchair to ensure that no inadvertent movement has occurred. If the configuration of the wheelchair reproducibly or irreversibly changes during the test (e.g. if the tyre rolls off the rim or the wheelchair partially folds),

— record the nature of the occurrence and the angle of the test platform at which this occurs in the comments section of the test report [item (j) in Clause 12], and

— complete the test.

d) Measure and record the tipping angle (either wheelchair tipping angle or anti-tip device tipping angle) to the nearest 1°.

e) Lower the test platform to horizontal.

f) Where applicable (e.g. in the tests for static stability with anti-tip devices), allow the running wheels of the wheelchair to drop back onto the test platform.

CAUTION — These tests can be hazardous. It is essential that appropriate safety precautions be taken to protect the test personnel.

8 Test for static stability in the forward direction

標準檢驗局
內部公務使用

8.1 General

The test methods specified in Clauses 8 to 11 of this part of ISO 7176 can be performed in any sequence.

a) For wheelchairs with non-lockable front wheels, measure the forward wheelchair tipping angles as specified in 8.2 and 8.4 only.

b) For wheelchairs with lockable front wheels, measure the forward wheelchair tipping angles as specified in 8.2 to 8.5.

c) For wheelchairs with a single front wheel or if the contact points of the front wheels are less than one wheel diameter apart, then treat the wheelchair as if it had only one front wheel. In such circumstances, the wheelchair will tip in a more lateral direction, and the tests specified in Clause 8 shall be omitted. This aspect of stability is measured in Clause 10.

 © ISO 2014 – All rights reserved

8.2 Wheels unlocked and the wheelchair in the least stable configuration

8.2.1 Set adjustable parts of the wheelchair in the least stable configuration for forward stability. Table 1 illustrates the usual effect of typical adjustments. Multiple trials might be necessary to verify the least and most stable configurations. Configurations of the wheelchair that create a seating position that is not foreseeable for an occupant represented by the chosen seated dummy should not be used for testing. An example of this would be an unreasonably short seat depth for the selected dummy (to take the appropriate dummy seat loading plate) or a back support that is inclined forward.

Table 1 — Forward stability

Adjustable wheelchair component	Least stable	Most stable
Rear wheel position, fore-aft	Forward	Back
Front wheel position, fore-aft	Back	Forward
Seat position, fore-aft	Forward	Back
Seat position, vertical	High	Low
Back support position, fore-aft	Forward	Back
Back support, recline	Upright	Reclined
Body support system, tilt	Upright	Tilted back
Elevating leg support position	Up	Down

8.2.2 Place the wheelchair on the horizontal test platform so that it will face down the slope when the test platform is inclined.

Position the wheelchair so that a line through the axis of the downhill running wheels is parallel ±3° to the hinge of the test platform.

Orient any downhill castor wheels so that they are rotated uphill and any uphill castor wheels so that they are rotated downhill.

Orient any pivot wheels or pivot drive wheels to the straight ahead position.

8.2.3 Set up the roll restraint (5.3) and the tipping limiter (5.5) as shown in Figure 2.

8.2.4 Unlock the downhill wheels.

8.2.5 Perform the general test procedure specified in Clause 7.

標準檢驗局
內部公務使用

© ISO 2014 – All rights reserved

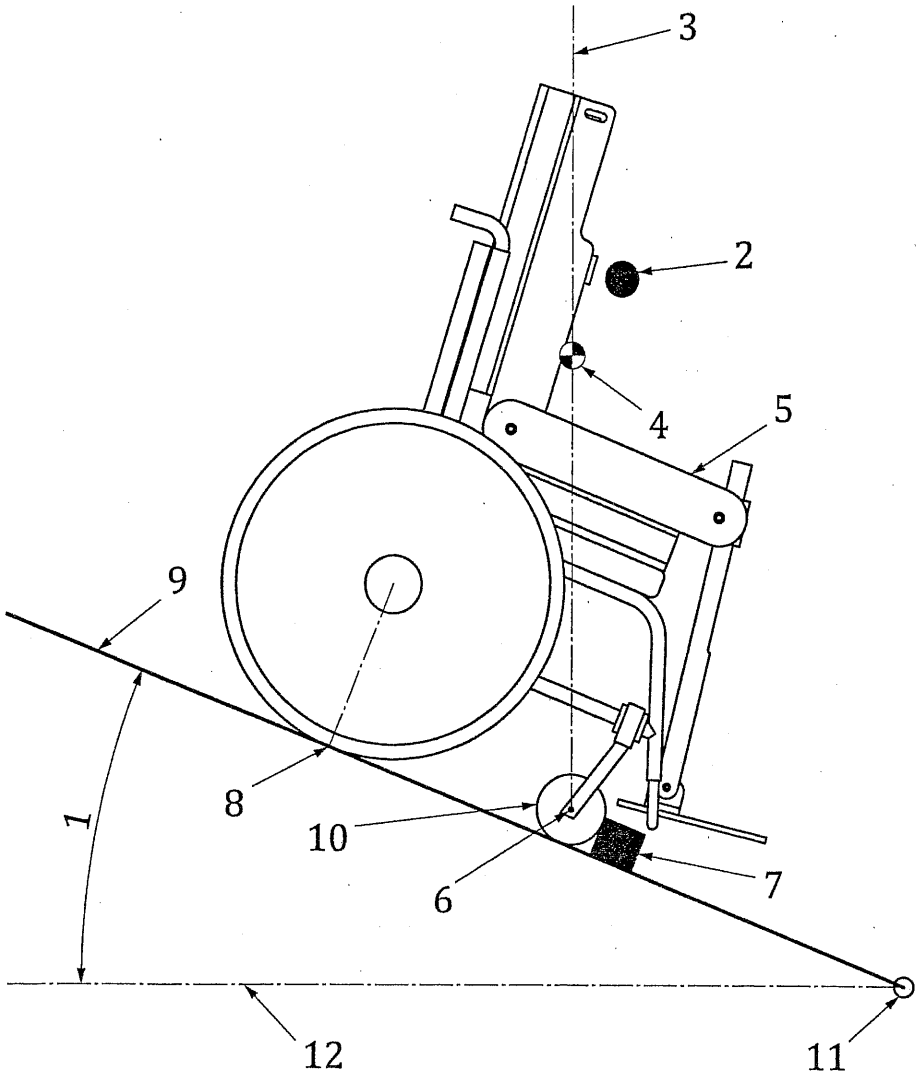

Key

1	wheelchair tipping angle	7	roll restraint (5.3)
2	tipping limiter (5.5)	8	force detection points
3	vertical	9	test platform
4	centre of mass of wheelchair plus dummy	10	unlocked wheel
5	test dummy	11	hinge of the test platform
6	axis of tip	12	horizontal

NOTE 1 The figures given in the body of this part of ISO 7176 use the example of a manual wheelchair with castor wheels at the front and manoeuvring wheels at the rear. However, this part of ISO 7176 applies to a wide range of manual and electrically powered wheelchairs (including scooters) with corresponding variations of design. Figures 2 to 10 illustrate the orientation of the wheelchair on the test platform and examples of methods to prevent the wheelchair from sliding or rolling on the test platform and from tipping too far during the test procedures.

NOTE 2 The figure illustrates an unlocked castor wheel with its roll restraint (5.3). Such restraint is also applicable for any other unlocked wheels where required. The axis of tip lies in the axles of the front wheels.

Figure 2 — Forward stability, wheels unlocked

標準檢驗局
內部公務使用

8.3 Downhill wheels locked and the wheelchair in the least stable configuration

8.3.1 Set adjustable parts of the wheelchair in the least stable configuration for forward stability (see Table 1).

© ISO 2014 – All rights reserved

8.3.2 Place the wheelchair on the horizontal test platform so that it will face down the slope when the test platform is inclined.

Position the wheelchair so that a line through the contact points of the downhill running wheels is parallel ±3° to the hinge of the test platform.

Orient any downhill castor wheels so that they are rotated uphill and any uphill castor wheels so that they are rotated downhill.

Orient any pivot wheels or pivot drive wheels to the straight ahead position.

8.3.3 Lock the downhill wheels.

8.3.4 Set up the slide restraint (5.4) and the tipping limiter (5.5) as shown in Figure 3.

8.3.5 Perform the general test procedure specified in Clause 7.

標準檢驗局
內部公務使用

© ISO 2014 – All rights reserved

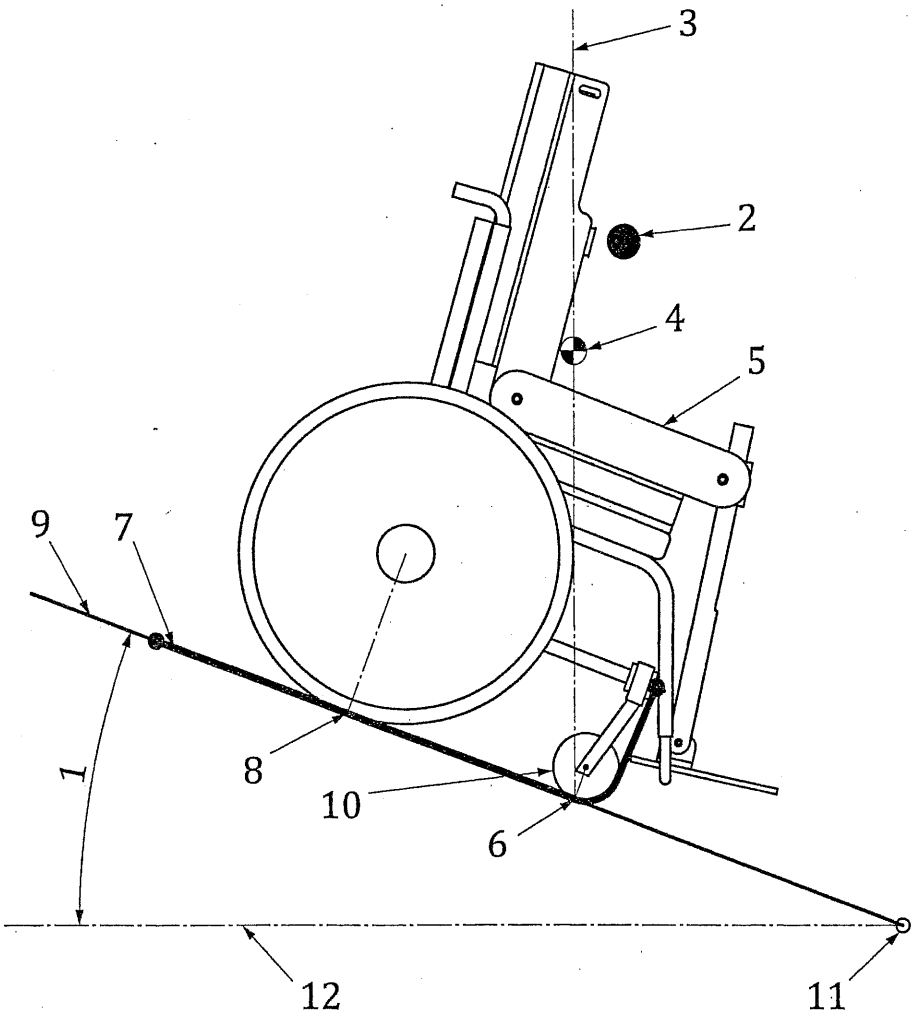

Key

1	wheelchair tipping angle	7	slide restraint (5.4)
2	tipping limiter (5.5)	8	force detection points
3	vertical	9	test platform
4	centre of mass of wheelchair plus dummy	10	locked wheel
5	test dummy	11	hinge of the test platform
6	axis of tip	12	horizontal

NOTE 1 Figure 3 illustrates a locked castor wheel with its slide restraint (5.4). This slide restraint is also applicable for any other locked wheels. The axis of tip lies at the contact points of the front wheels.

NOTE 2 One end of the flexible means of the slide restraint is attached to the uphill end of the test platform. The flexible means runs under the wheelchair and bends around the front wheels. The other end of the flexible means is attached to the wheelchair frame. This prevents the wheelchair from sliding.

Figure 3 — Forward stability, wheels locked

標準檢驗局
內部公務使用

8.4 Wheels unlocked and the wheelchair in the most stable configuration

8.4.1 Set adjustable parts of the wheelchair in the most stable configuration for forward stability. Table 1 (see 8.2.1) illustrates the effect of typical adjustments.

© ISO 2014 – All rights reserved

8.4.2 Place the wheelchair on the horizontal test platform so that it will face down the slope when the test platform is inclined.

Position the wheelchair so that a line through the axis of the downhill running wheels is parallel ±3° to the hinge of the test platform. Orient any downhill castor wheels so that they are rotated uphill and any uphill castor wheels so that they are rotated downhill.

Orient any pivot wheels or pivot drive wheels to the straight ahead position.

8.4.3 Set up the roll restraint (5.3) and the tipping limiter (5.5) as shown in Figure 2.

8.4.4 Unlock the downhill wheels.

8.4.5 Perform the general test procedure specified in Clause 7.

8.5 Downhill wheels locked and the wheelchair in the most stable configuration

8.5.1 Set adjustable parts of the wheelchair in the most stable configuration for forward stability (see Table 1).

8.5.2 Place the wheelchair on the horizontal test platform so that it will face down the slope when the test platform is inclined.

Position the wheelchair so that a line through the contact points of the downhill running wheels is parallel ±3° to the hinge of the test platform.

Orient any downhill castor wheels so that they are rotated uphill and any uphill castor wheels so that they are rotated downhill.

Orient any pivot wheels or pivot drive wheels to the straight ahead position.

8.5.3 Lock the downhill wheels.

8.5.4 Set up the slide restraint (5.4) and the tipping limiter (5.5) as shown in Figure 3.

8.5.5 Perform the general test procedure specified in Clause 7.

9 Test for static stability in the rearward direction

標準檢驗局
內部公務使用

9.1 General

9.1.1 For wheelchairs with non-lockable rear wheels (see 3.7), measure the rearward wheelchair tipping angles as specified in 9.2 and 9.4 only.

9.1.2 For wheelchairs with lockable rear wheels, measure the rearward wheelchair tipping angles as specified in 9.2 to 9.5.

9.1.3 For wheelchairs with a single rear wheel or if the contact points of the rear wheels are less than one wheel diameter apart, then treat the wheelchair as if it had only one rear wheel. In such circumstances, the wheelchair will tip in a more lateral direction, and the tests specified in Clause 9 shall be omitted. This aspect of stability is measured in Clause 10.

© ISO 2014 – All rights reserved

9.2 Wheels unlocked and the wheelchair in the least stable configuration

9.2.1 Set adjustable parts of the wheelchair in the least stable configuration for rearward stability. Table 2 illustrates the usual effect of typical adjustments. Multiple trials might be necessary to verify the least and most stable configurations. Configurations of the wheelchair that create a seating position that is not foreseeable for an occupant represented by the seated dummy should not be used for testing. An example of this would be an unreasonably short seat depth for the selected dummy (to take the appropriate dummy seat loading plate) or a back support angle that is inclined forward.

Table 2 — Rearward stability

Adjustable wheelchair component	Least stable	Most stable
Rear wheel position, fore-aft	Forward	Back
Front wheel position, fore-aft	Back	Forward
Seat position, fore-aft	Back	Forward
Seat position, vertical	High	Low
Back support position, fore-aft	Back	Forward
Back support, recline	Reclined	Upright
Body support system, tilt	Tilted back	Upright
Elevating leg support position	Down	Up

9.2.2 Place the wheelchair on the horizontal test platform so that it will face up the slope when the test platform is inclined.

Position the wheelchair so that a line through the axis of the downhill running wheels is parallel ±3° to the hinge of the test platform. Orient any downhill castor wheels so that they are rotated uphill and any uphill castor wheels so that they are rotated downhill.

Orient any pivot wheels or pivot drive wheels to the straight ahead position.

9.2.3 Set up the roll restraint (5.3) and the tipping limiter (5.5) as shown in Figure 4.

9.2.4 Unlock the downhill wheels.

9.2.5 Perform the general test procedure specified in Clause 7.

標準檢驗局
內部公務使用

© ISO 2014 – All rights reserved

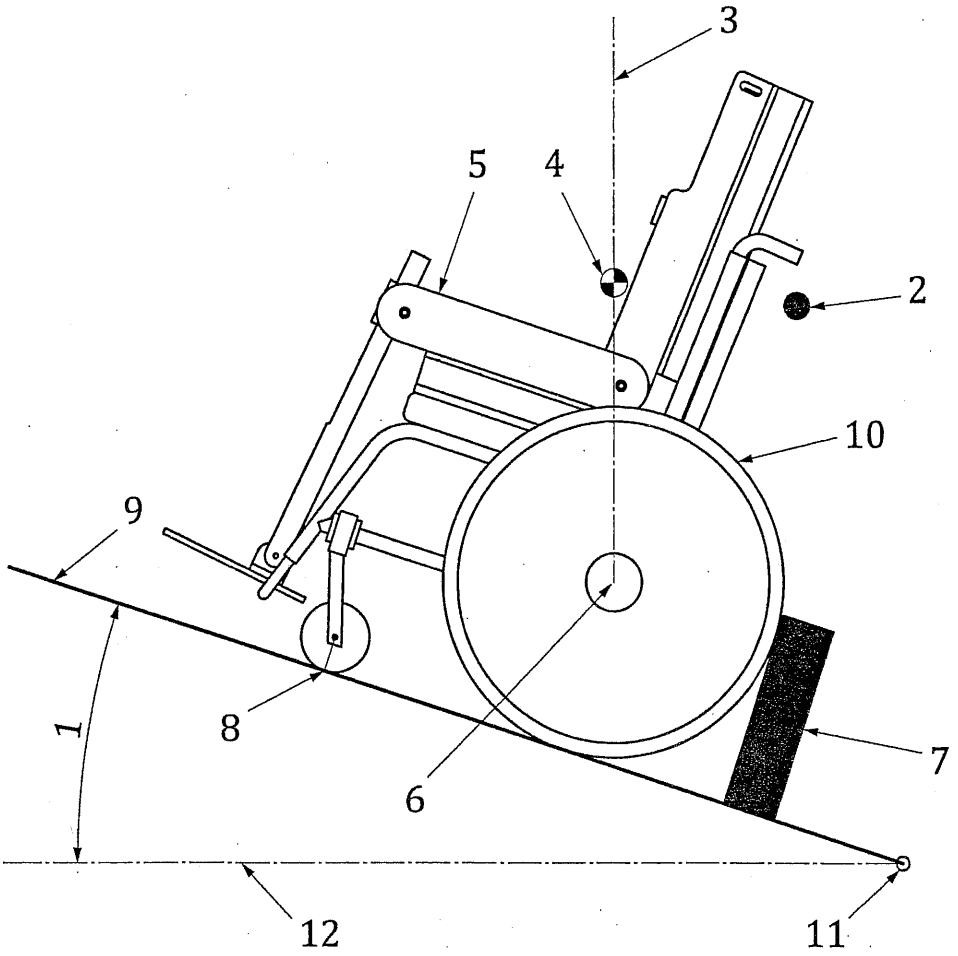

Key

1	wheelchair tipping angle	7	roll restraint (5.3)
2	tipping limiter (5.5)	8	force detection points
3	vertical	9	test platform
4	centre of mass of wheelchair plus dummy	10	unlocked wheel
5	test dummy	11	hinge of the test platform
6	axis of tip	12	horizontal

NOTE Figure 4 illustrates an unlocked manoeuvring wheel with its roll restraint (5.3). This restraint is also applicable for any other unlocked wheels. The axis of tip lies in the axle of the rear wheels.

Figure 4 — Rear stability, wheels unlocked

標準檢驗局
內部公務使用

9.3 Wheels locked and the wheelchair in the least stable configuration

9.3.1 Set adjustable parts of the wheelchair in the least stable configuration for rearward stability (see Table 2).

9.3.2 Place the wheelchair on the horizontal test platform so that it will face up the slope when the test platform is inclined.

Position the wheelchair so that a line through the contact points of the downhill running wheels is parallel ±3° to the hinge of the test platform.

Orient any downhill castor wheels so that they are rotated uphill and any uphill castor wheels so that they are rotated downhill.

© ISO 2014 – All rights reserved

Orient any pivot wheels or pivot drive wheels to the straight ahead position.

9.3.3 Lock the downhill wheels.

9.3.4 Set up the slide restraint (5.4) and the tipping limiter (5.5) as shown in Figure 5.

9.3.5 Perform the general test procedure specified in Clause 7.

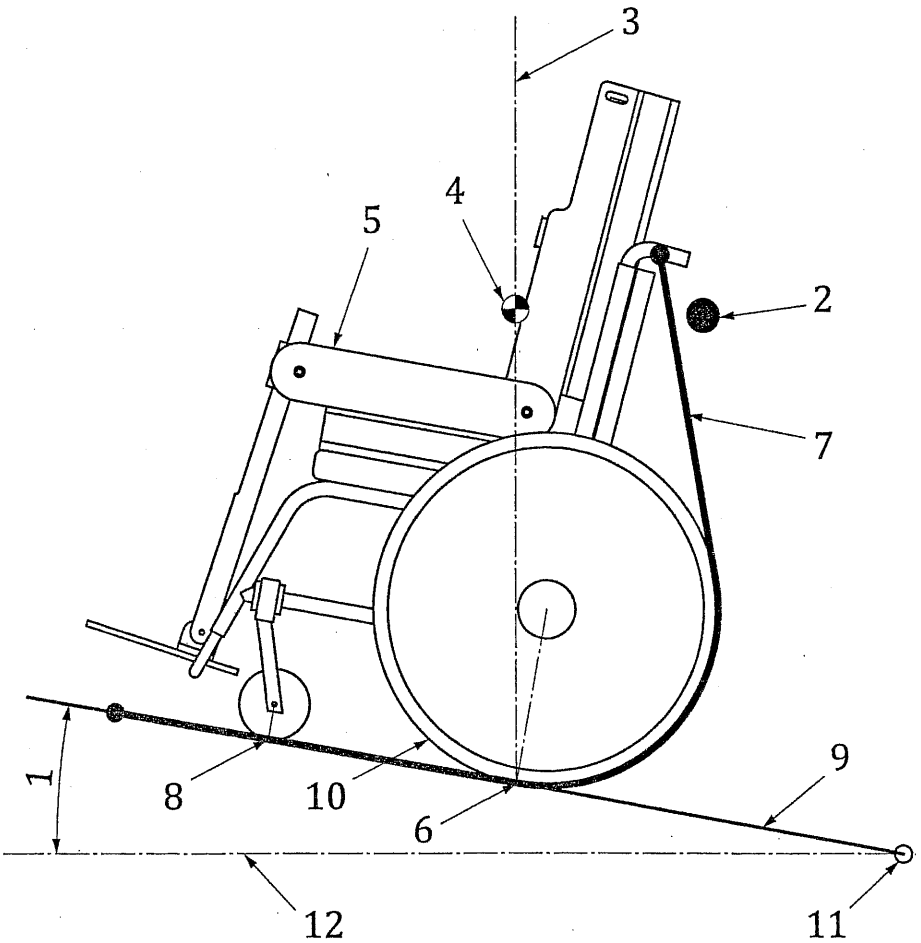

Key

1	wheelchair tipping angle	7	slide restraint (5.4)
2	tipping limiter (5.5)	8	force detection points
3	vertical	9	test platform
4	centre of mass of wheelchair plus dummy	10	locked wheel
5	test dummy	11	hinge of the test platform
6	axis of tip	12	horizontal

NOTE 1 Figure 5 illustrates a locked manoeuvring wheel with its slide restraint (5.4). The restraint is also applicable for any other locked wheels. The axis of tip lies at the contact points of the rear wheels.

NOTE 2 The one end of the flexible means of the slide restraint is attached to the uphill end of the test platform. The flexible means runs under the wheelchair and bends around the rear wheels. The other end of the flexible means is attached to the wheelchair frame. This prevents the wheelchair from sliding.

Figure 5 — Rear stability, wheels locked

標準檢驗局
內部公務使用

© ISO 2014 – All rights reserved

9.4 Wheels unlocked and the wheelchair in the most stable configuration

9.4.1 Set adjustable parts of the wheelchair in the most stable configuration for rearward stability (see Table 2).

9.4.2 Place the wheelchair on the horizontal test platform so that it will face up the slope when the test platform is inclined.

Position the wheelchair so that a line through the axis of the downhill running wheels is parallel ±3° to the hinge of the test platform.

Orient any downhill castor wheels so that they are rotated uphill and any uphill castor wheels so that they are rotated downhill.

Orient any pivot wheels or pivot drive wheels to the straight ahead position.

9.4.3 Set up the roll restraint (5.3) and the tipping limiter (5.5) as shown in Figure 4.

9.4.4 Unlock the downhill wheels.

9.4.5 Perform the general test procedure specified in Clause 7.

9.5 Wheels locked and the wheelchair in the most stable configuration

9.5.1 Set adjustable parts of the wheelchair in the most stable configuration for rearward stability (see Table 2).

9.5.2 Place the wheelchair on the horizontal test platform so that it will face up the slope when the test platform is inclined.

Position the wheelchair so that a line through the contact points of the downhill running wheels is parallel ±3° to the hinge of the test platform.

Orient any downhill castor wheels so that they are rotated uphill and any uphill castor wheels so that they are rotated downhill.

Orient any pivot wheels or pivot drive wheels to the straight ahead position.

9.5.3 Lock the downhill wheels.

9.5.4 Set up the slide restraint (5.4) and the tipping limiter (5.5) as shown in Figure 5.

9.5.5 Perform the general test procedure specified in Clause 7.

標準檢驗局
內部公務使用

10 Test for static stability, lateral orientation

10.1 General

CAUTION — Note that the wheelchair can tumble down in a direction that is unexpected.

This test is applicable to all wheelchairs.

When performing the test for static stability in lateral orientation, the wheelchair is tipped about each adjacent pair of running wheels at one side (left or right) of the wheelchair. When the wheelchair has an anti-tip device, a further test is performed about the wheel axle (or contact point if a post) of the anti-tip device and the adjacent running wheel. When the wheelchair tends to twist away from the axis of tip

© ISO 2014 – All rights reserved

標準檢驗局
內部公務使用

during testing according to Clause 10 and does not tip, the test should be discontinued and the result noted.

NOTE Such twisting can occur when the centre of mass is not within the supporting area.

10.2 Wheelchair in the least stable configuration

10.2.1 Set adjustable parts of the wheelchair in the least stable configuration for lateral stability. Table 3 illustrates the usual effect of typical adjustments. Configurations of the wheelchair that create a seating position that is not foreseeable for use should not be used for testing. An example of this would be an unreasonably short seat depth for a given maximum occupant mass (to take the appropriate dummy seat loading plate) or a back support angle that is inclined forward.

If the seat is capable of swivelling to more than one position around the vertical axis (e.g. in a scooter), all testing shall be carried out with the seat facing forward.

Table 3 — Lateral stability — usual influence of adjustments

Adjustable wheelchair component	Least stable	Most stable
Wheel tracks	Narrowest track	Widest track
Camber	Positive	Negative
Castor assembly attached to frame, inside-outside	Inside	Outside
Castor assembly attached to frame, fore-aft	Short wheelbase	Long wheelbase
Seat position, vertical	High	Low
Seat position, fore-aft	Toward axis with narrower track	Toward axis with wider track
Back support, recline	Upright	Reclined
Back support position, fore-aft	Toward axis with narrower track	Toward axis with wider track
Body support system, tilt	Upright	Tilted

10.2.2 Place the wheelchair on the horizontal test platform so that it will face across the slope when the test platform is inclined.

Orient any downhill castor wheel so that it is rotated uphill and a line through the castor wheel axle is parallel ±3° to the hinge of the test platform.

Orient any downhill pivot wheel or pivot drive wheel so that it is rotated uphill the maximum angle possible.

Orient any uphill castor wheel so that it is rotated downhill.

Position the wheelchair so that a line that connects the contact points (see 3.4) of its two downhill wheels is parallel ±3° to the hinge of the test platform.

NOTE 1 The axis of tip of locked wheels is the contact point, while for non-locked wheels it is the axis of rotation of the wheel (the axle) unless tipping occurs perpendicular to this axis, when it is the contact point. As the castor axle is parallel to the hinge platform, its axis of tip will be directly above the contact point. The above requirement assumes that for most drive/manoeuvring wheels (that don't swivel) the projection of the axle onto the test plane (if the wheel is not lockable) will be very close to the contact point during lateral stability testing.

NOTE 2 Depending on different tracks at the forward and rearward axis, the wheelchair can be obliquely oriented.

 © ISO 2014 – All rights reserved

NOTE 3 An oblique orientation of the wheelchair can require re-adjustment of the castor wheels about their castor stem in order to set the axles of their wheels parallel to the hinge of the test platform.

10.2.3 Lock any wheels that are lockable (see 3.6).

10.2.4 Set up the roll restraint (5.3) when a castor wheel, pivot wheel, or pivot drive wheel is unlocked (see Figure 6).

Set up the slide restraint (5.4) when a castor wheel, pivot wheel, or pivot drive wheel is locked (see Figure 7).

Set up the slide restraint (5.4) when a drive wheel, manoeuvring wheel, or guide wheel is locked or unlocked (see Figure 8).

Set up the tipping limiter (5.5), without restricting the freedom of the wheelchair to tip.

10.2.5 Perform the general test procedure specified in Clause 7, and record the side about which the tipping occurred and any particular configuration used (least or most stable).

10.2.6 Repeat the tests in 10.2.1 to 10.2.5 for the other side of the wheelchair, unless the wheelchair is symmetrical.

標準檢驗局
內部公務使用

© ISO 2014 – All rights reserved

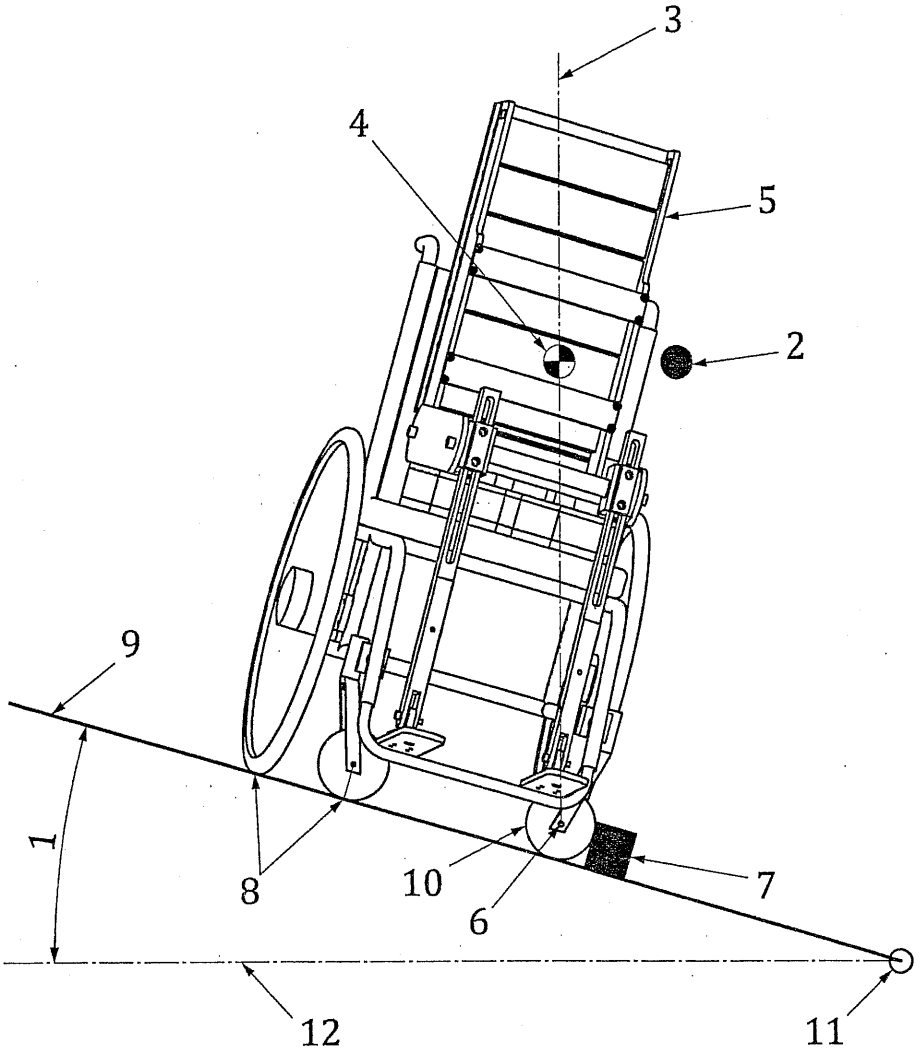

Key

1 wheelchair tipping angle
2 tipping limiter (5.5)
3 vertical
4 centre of mass of wheelchair plus dummy
5 test dummy
6 axis of tip
7 roll restraint (5.3)
8 force detection points
9 test platform
10 unlocked wheel
11 hinge of the test platform
12 horizontal

NOTE 1 Figure 6 illustrates an unlocked castor wheel with its roll restraint (5.3). This restraint is also applicable for unlocked pivot wheels or pivot drive wheels. The axis of tip lies in the axle of the unlocked wheel.

NOTE 2 Figure 6 also shows the slightly oblique orientation of the wheelchair that is often needed to ensure that the axis of tip is parallel to the hinge of the test platform. The appropriate restraint for a drive wheel, manoeuvring wheel, or guide wheel is shown in Figure 8.

Figure 6 — Lateral stability, unlocked wheels

標準檢驗局
內部公務使用

© ISO 2014 – All rights reserved

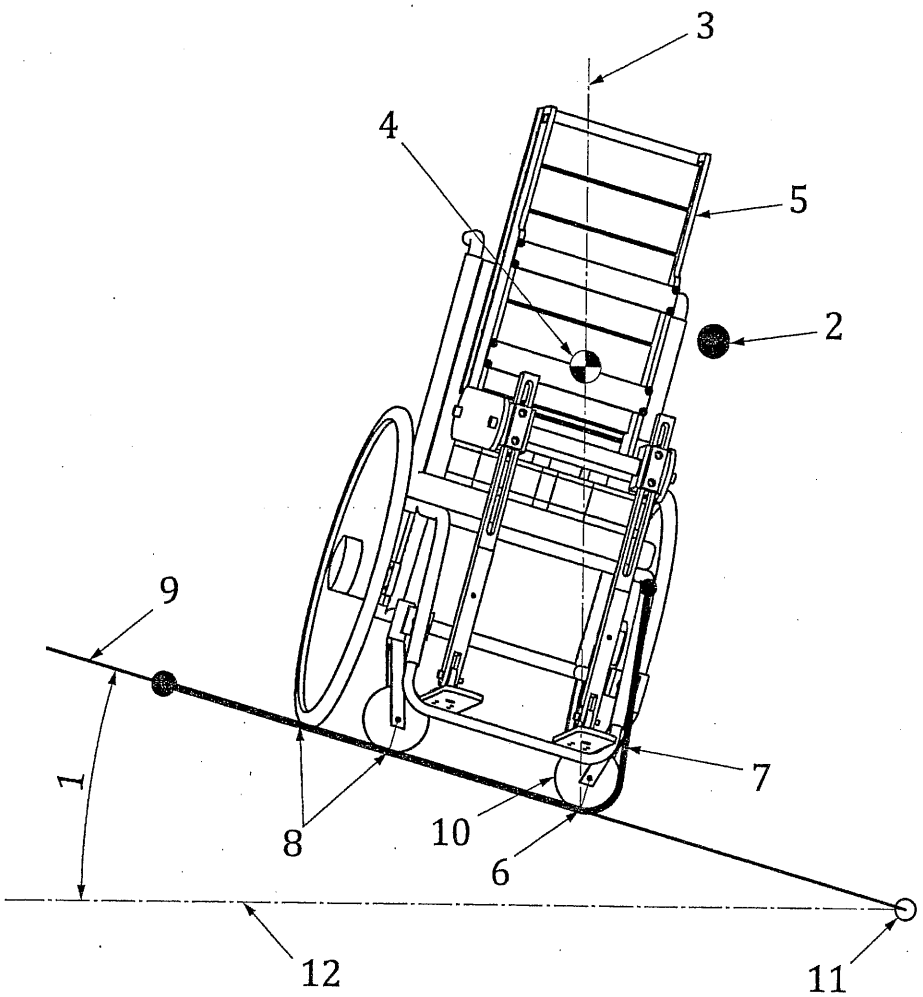

Key

1 wheelchair tipping angle
2 tipping limiter (5.5)
3 vertical
4 centre of mass of wheelchair plus dummy
5 test dummy
6 axis of tip
7 slide restraint (5.4)
8 force detection points
9 test platform
10 locked wheel
11 hinge of the test platform
12 horizontal

NOTE 1 Figure 7 illustrates a locked castor wheel with its slide restraint. It is also applicable for locked pivot wheels or pivot drive wheels. The axis of tip lies at the contact point of the locked wheel. The figure also shows the slightly oblique orientation of the wheelchair that is often needed to ensure that the axis of tip is parallel to the hinge of the test platform. How a drive wheel, manoeuvring wheel, or guide wheel is restrained is shown in Figure 8.

NOTE 2 The one end of the flexible means of the slide restraint is attached to the uphill end of the test platform. The flexible means runs under the wheelchair and bends around the locked castor wheel, pivot wheel, or pivot drive wheel. The other end of the flexible means is attached to the wheelchair frame. This prevents the wheelchair from sliding.

Figure 7 — Lateral stability, locked wheels

標準檢驗局
內部公務使用

© ISO 2014 – All rights reserved

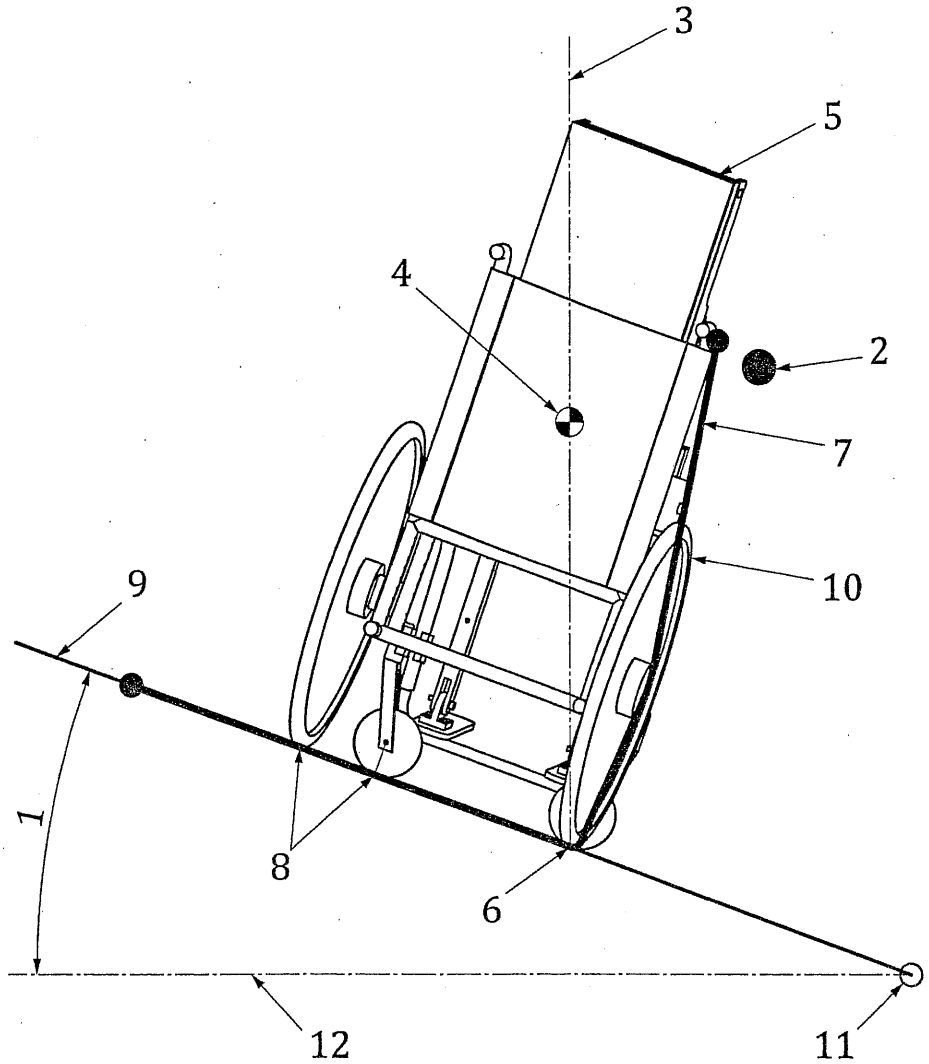

Key

1	wheelchair tipping angle	7	slide restraint (5.4)
2	tipping limiter	8	force detection points
3	vertical	9	test platform
4	centre of mass of wheelchair plus dummy	10	locked or unlocked wheel
5	test dummy	11	hinge of the test platform
6	axis of tip	12	horizontal

NOTE 1 Figure 8 illustrates a locked or unlocked manoeuvring wheel with its slide restraint. Figure 8 is also applicable for locked or unlocked drive wheels or guide wheels. The axis of tip lies at the contact point of the locked wheel. The figure also shows the slightly oblique orientation of the wheelchair that is often needed to ensure that the axis of tip is parallel to the hinge of the test platform. How an unlocked castor wheel, pivot wheel, or pivot drive wheel is restrained is illustrated in Figure 6; how a locked castor wheel, pivot wheel, or pivot drive wheel is restrained is illustrated in Figure 7.

NOTE 2 The one end of the flexible means of the slide restraint is attached to the uphill end of the test platform. The flexible means runs under the wheelchair and bends around the locked or unlocked drive wheel, manoeuvring wheel, or guide wheel. The other end of the flexible means is attached to the wheelchair frame. This prevents the wheelchair from sliding.

Figure 8 — Lateral stability, locked or unlocked drive wheel, manoeuvring wheel, or guide wheel

標準檢驗局
內部公務使用

© ISO 2014 – All rights reserved

標準檢驗局
內部公務使用

10.3 Wheelchair in the most stable configuration

10.3.1 Set adjustable parts of the wheelchair in the most stable configuration for lateral stability. Table 3 (see 10.2.1) illustrates the effect of typical adjustments.

If the seat is capable of swivelling to more than one position around the vertical axis (e.g. in a scooter), all testing shall be carried out with the seat facing forward.

10.3.2 Repeat 10.2.2 to 10.2.6.

11 Test for static stability with forward or rearward anti-tip devices

11.1 General

This test provides information about the stability of a wheelchair equipped with forward or rearward anti-tip devices, when the wheelchair has been tipped such that the load of the wheelchair is transmitted by the anti-tip device to the test platform.

If the wheelchair has rear and forward anti-tip devices, both rear and forward anti-tip device stability shall be measured.

NOTE This test is applicable only to wheelchairs with forward or rearward anti-tip devices. Test methods for setting lateral anti-tip devices into their least and most effective configurations are currently under investigation.

Identify the wheels or contact points of the anti-tip devices. In the test for static stability with anti-tip devices, the wheelchair is tipped about the wheels or posts of the anti-tip devices.

11.2 Anti-tip devices in the least effective configuration

11.2.1 In the case of rearward anti-tip devices, adjust the rear running wheels to the most rearward position in the range of adjustments specified by the manufacturer.

In the case of forward anti-tip devices, adjust the forward running wheels to the most forward position in the range of adjustment specified by the manufacturer.

In the case of anti-tip devices attached to the wheel assembly, these changes could result in increased stability, in which case adjust the wheel position to achieve the least stability.

NOTE In most instances, the anti-tip device is attached to the wheelchair frame. When the wheels adjacent to the anti-tip device are moved in the direction of the anti-tip device, less of the anti-tip device is exposed and it can become less effective.

11.2.2 Set the configuration of all other adjustable parts of the wheelchair in the least stable configuration for the direction of stability being tested within the effective range of adjustment specified by the manufacturer. Table 1 (see 8.2.1) and Table 2 (see 9.2.1) illustrate the effect of typical adjustments on forward and rearward stability.

11.2.3 If the anti-tip devices are adjustable, set them in the least effective of the working positions specified by the manufacturer.

NOTE The least effective working position is with the wheels or posts of the anti-tip device minimally exposed from the adjacent wheels and as high as possible above the ground.

Many anti-tip devices can be adjusted into a position in which they are deliberately ineffective (e.g. to permit the wheelchair to ascend or descend a curb). Do not perform the test specified in 11.2 with the anti-tip device in such a position.

© ISO 2014 – All rights reserved

11.2.4 Place the wheelchair on the horizontal test platform so that the tested anti-tip devices will be downhill when the test platform is inclined. Position the wheelchair as follows.

— If the anti-tip devices have non-lockable guide wheels, position the wheelchair so that a line through their axes is parallel ±3° to the hinge of the test platform.

— If the anti-tip devices have non-lockable castor wheels, rotate them so that they will be uphill when the test platform is inclined and position the wheelchair so that a line through their axes is parallel ±3° to the hinge of the test platform.

— If the anti-tip devices have lockable wheels or posts, position the wheelchair so that a line through their most downhill contact points (see 3.4) is parallel ±3° to the hinge of the test platform.

— If the anti-tip devices have lockable castor wheels, rotate them so that they will be uphill when the test platform is inclined and position the wheelchair so that a line through their most downhill contact points is parallel ±3° to the hinge of the test platform.

11.2.5 If the running wheels that are adjacent to the anti-tip devices are castor wheels, rotate them so that they will be uphill when the test platform is inclined.

Orient any other running wheels that are castor wheels so that they are rotated downhill the maximum angle possible.

Orient any other running wheels to the straight ahead position.

11.2.6 Restrain the wheelchair as follows.

— If the anti-tip devices have non-lockable wheels, set up the roll restraint (5.3) and the tipping limiter (5.5) as shown in Figure 9.

— If the anti-tip devices have posts or lockable wheels, lock them and set up the slide restraint (5.4) and the tipping limiter (5.5) as shown in Figure 10.

11.2.7 With the test platform horizontal, pre-tip the wheelchair about the running wheels that are adjacent to the anti-tip devices until the anti-tip devices firmly contact the test platform.

If the anti-tip devices have spring suspension, pre-tip the wheelchair until the load of the loaded wheelchair is transmitted to the test platform by the anti-tip devices.

NOTE The wheelchair is pre-tipped in order to prevent any dynamic effects such as hitting the anti-tip device into the test platform after a start from horizontal.

If the wheelchair will not remain in this position (because the angle of pre-tip is less than the wheelchair tipping angle with the wheels locked, as determined in 8.3 or 9.3), keep the wheelchair (e.g. with wedged shims under the most uphill wheels) in the pre-tipped position (the anti-tip devices and the adjacent running wheels firmly contact the test platform).

11.2.8 Perform the general test procedure specified in Clause 7 (see Figure 9 for anti-tip devices with unlocked wheels and Figure 10 for anti-tip devices with posts or locked wheels).

標準檢驗局
內部公務使用

© ISO 2014 – All rights reserved

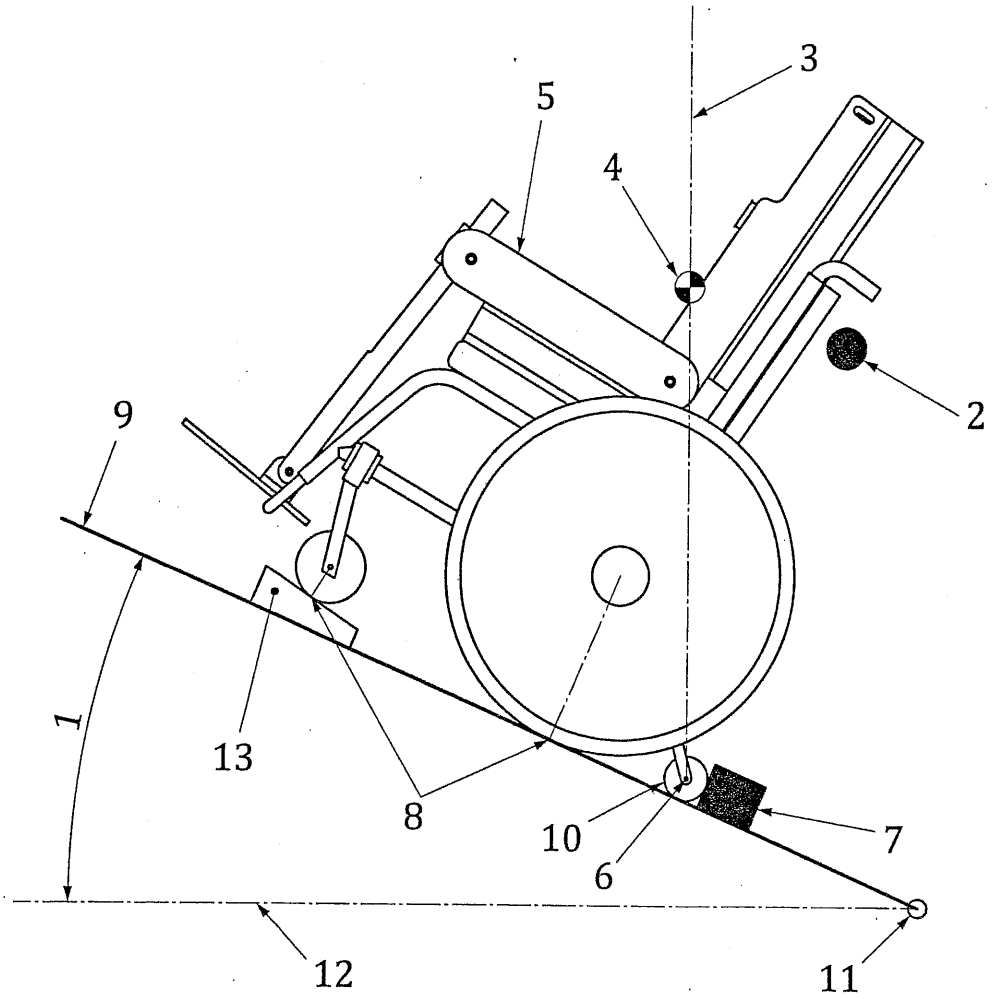

Key

1 anti-tip devices tipping angle
2 tipping limiter (5.5)
3 vertical
4 centre of mass of wheelchair plus dummy
5 test dummy
6 axis of tip
7 roll restraint (5.3)
8 force detection points
9 test platform
10 unlocked wheel of anti-tip devices
11 hinge of the test platform
12 horizontal
13 wedged shim

NOTE Figure 9 illustrates an anti-tip device with unlocked wheels with their roll restraints. The axis of tip lies in the axle of the unlocked wheels.

Figure 9 — Anti-tip devices with unlocked wheels

標準檢驗局
內部公務使用

© ISO 2014 – All rights reserved

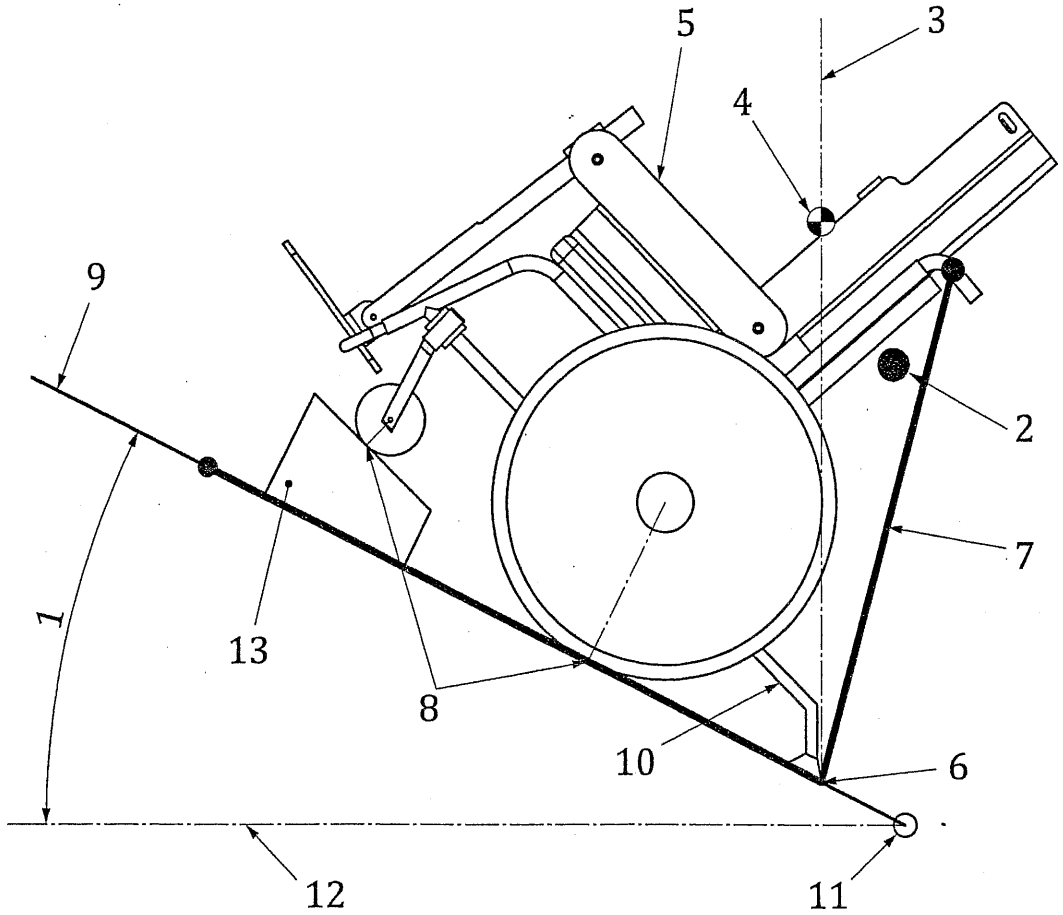

Key

1 anti-tip devices tipping angle
2 tipping limiter (5.5)
3 vertical
4 centre of mass of wheelchair plus dummy
5 test dummy
6 axis of tip
7 slide restraint (5.4)
8 force detection points
9 test platform
10 locked wheel or post of anti-tip devices
11 hinge of the test platform
12 horizontal
13 wedged shim

NOTE 1 Figure 10 illustrates an anti-tip device with posts with their slide restraints. This figure is also applicable for anti-tip devices with locked wheels. The axis of tip lies at the most downhill contact point (see 3.4) of the post or locked wheel.

NOTE 2 The one end of the flexible means of the slide restraint is attached to the uphill end of the test platform. The flexible means runs under the wheelchair and bends around the posts or locked wheels of the anti-tip device. The other end of the flexible means is attached to the wheelchair frame. This prevents the wheelchair from sliding.

Figure 10 — Anti-tip devices with posts or locked wheels

標準檢驗局
內部公務使用

11.3 Anti-tip devices in the most effective configuration

11.3.1 In the case of rearward anti-tip devices, adjust the rear running wheels to the most forward position in the range of adjustments specified by the manufacturer.

In the case of forward anti-tip devices, adjust the forward running wheels to the most rearward position in the range of adjustment specified by the manufacturer.

© ISO 2014 – All rights reserved

標準檢驗局
內部公務使用

In the case of anti-tip devices attached to the wheel assembly, these changes could result in decreased stability, in which case adjust the wheel position to achieve the most stability.

NOTE In most instances, the anti-tip device is attached to the wheelchair frame. When the wheels adjacent to the anti-tip device are moved away from the anti-tip devices, more of the anti-tip devices are exposed and they can become more effective.

11.3.2 Set the configuration of all other adjustable parts of the wheelchair in the least stable configuration for the direction of stability being tested within the effective range of adjustment specified by the manufacturer. Table 1 (see 8.2.1) and Table 2 (see 9.2.1) illustrate the effect of typical adjustments on forward and rearward stability.

11.3.3 If the anti-tip devices are adjustable, set them in the most effective of the working positions specified by the manufacturer.

NOTE The most effective working position is with the wheels or posts of the anti-tip devices maximally exposed from the adjacent wheels and as low as possible above the ground.

11.3.4 Many anti-tip devices can be adjusted into a position in which they are deliberately ineffective (e.g. to permit the wheelchair to ascend or descend a curb). Do not perform the test specified in 11.3 with the anti-tip devices in such a position. Repeat 11.2.4 to 11.2.8.

11.4 Test for effectiveness of anti-tip devices

11.4.1 This test evaluates the ability of anti-tip devices in their most effective configuration to prevent a static wheelchair that has reached its tipping angle from tipping over.

11.4.2 Set up the wheelchair as specified in 11.3.1 to 11.3.3.

11.4.3 Place the wheelchair on the horizontal test platform so that it will face down the slope (for forward anti-tip devices), or up the slope (for rearward anti-tip devices) when the test platform is inclined.

11.4.4 Position the wheelchair so that a line through the axis of the downhill running wheels is parallel ±3° to the hinge of the test platform.

11.4.5 Orient any downhill castor wheels so that they are rotated uphill and any uphill castor wheels so that they are rotated downhill.

11.4.6 Orient any pivot wheels or pivot drive wheels to the straight ahead position.

11.4.7 Set up the roll restraint (5.3) and the tipping limiter (5.5) as shown in Figure 2, ensuring that

a) the roll restraint does not interfere with any action of the anti-tip device(s), and

b) the tipping limiter does not limit the freedom of the wheelchair to tip back beyond the anti-tip devices (to allow a transient tip beyond the limit of the anti-tip devices).

NOTE This can require iterative testing if test equipment interferes with the movement of the wheelchair during the test.

11.4.8 Unlock the downhill wheels.

11.4.9 Increase the slope of the test platform until the tipping angle is reached, and then prevent further movement of the platform.

11.4.10 Allow the wheelchair to tip fully onto the anti-tip device(s) without interference.

© ISO 2014 – All rights reserved

11.4.11 Record the direction of the wheelchair (forward or rearward facing), the angle of the test platform (±1°) at which this occurs, and whether the anti-tip device(s) prevented the wheel from continuing to tip over.

NOTE Temporary lifting of the rear running wheels off the platform does not constitute a failure provided the wheelchair returns to a position with both rear running wheels on the platform within 2 s.

11.4.12 Lower the test platform to the horizontal, allowing the wheelchair to drop back onto the test platform.

11.4.13 Repeat 11.4.3 to 11.4.12 for the opposite direction anti-tip devices (forward or rearward) if fitted.

12 Test report

The test report shall contain at least the following information:

a) the name, address, and accreditation status of the testing institution;

b) the name and address of the manufacturer of the wheelchair;

c) the wheelchair type and any serial and batch number;

d) the description of any equipment fitted to the wheelchair;

e) the details of the settings of adjustable parts;

f) the mass of the test dummy, in kilograms;

g) the test results (see Table 4);

h) the date of the test;

i) a statement that the test methods used were as specified in this part of ISO 7176;

j) any comments or observations;

k) the wheelchair specifications including effective seat width and seat depth;

l) the equipment and accessories installed on the wheelchair;

m) the position of all adjustable parts, including

— front wheels, rear wheels,

— body support system, seat, back support and leg support positions and angles,

— tracks, camber, castor assemblies, and

— anti-tip devices;

n) battery set mass and size, amp-hour capacity, type, manufacturer, and model;

o) tire types and sizes;

p) motor and controller type;

q) position of all operator adjustable controller settings.

標準檢驗局
內部公務使用

© ISO 2014 – All rights reserved

Table 4 — Static stability test results

Wheelchair tipping angle (degrees)				
Stability direction			Least stable	Most stable
Forward	Front wheels locked			
	Front wheels unlocked			
Rearward	Rear wheels locked			
	Rear wheels unlocked			
Lateral orientation[1]	Left			
	Right			
Anti-tip device tipping angle				
Stability direction		Least effective	Most effective	Does device prevent tipping over?
Anti-tip device[2]	Rearward			
	Forward			
[1] With lockable wheels locked.				
[2] With the wheelchair in least stable configuration (see 11.2.2 and 11.2.3).				
NOTE Specify whether any active-stability system was operational during any test and annotate the above table accordingly.				

13 Information disclosure

Manufacturers shall disclose in their specification sheets, in the manner and sequence specified in ISO 7176-15, the most and least stable wheelchair tipping angles and anti-tip device tipping angles, in degrees, for the following:

a) forward wheelchair tipping angle (wheels locked, if lockable, from 8.3; unlocked otherwise from 8.2);

b) rearward wheelchair tipping angle (wheels locked, if lockable, from 9.3; unlocked otherwise, from 9.2);

c) wheelchair tipping angles, lateral orientation of least stability (from 10.2 both left and right if different by more than 1°);

d) anti-tip device tipping angles (from 11.2 and 11.3) and whether the anti-tip device prevented tipping over of the wheelchair (11.4).

If an active-stability system is offered for the wheelchair tested, the manufacturer shall disclose the influence of that system on the above results (for example, using an annotated version of Table 4) in both the specification sheets and the wheelchair operator manual.

標準檢驗局
內部公務使用

© ISO 2014 – All rights reserved

Annex A
(informative)

Means to prevent wheels or posts from sliding

This method of preventing locked wheels or posts from sliding down a tilted test platform also permits the wheelchair to tip about the contact point (see 3.4) of the wheels or posts, as required in 5.4.

Attach a flexible but inelastic means (e.g. membrane, straps, or belts) to the test platform and to the wheelchair frame as illustrated in Figures 3, 5, 7, 8, and 10. The flexible means should be of a type and mass that do not affect the tipping characteristics of the wheelchair.

One end of the flexible means is attached to the uphill end of the test platform. The flexible means runs under the wheelchair and bends around the posts or locked wheels that need to be prevented from sliding. The other end of the flexible means is attached to the wheelchair frame.

標準檢驗局
內部公務使用

© ISO 2014 – All rights reserved

標準檢驗局
222833

標準檢驗局
內部公務使用

ICS 11.180.10
Price based on 28 pages

© ISO 2014 – All rights reserved